ARBO
THERMOPLASTIC
PUMPS
FILTERS

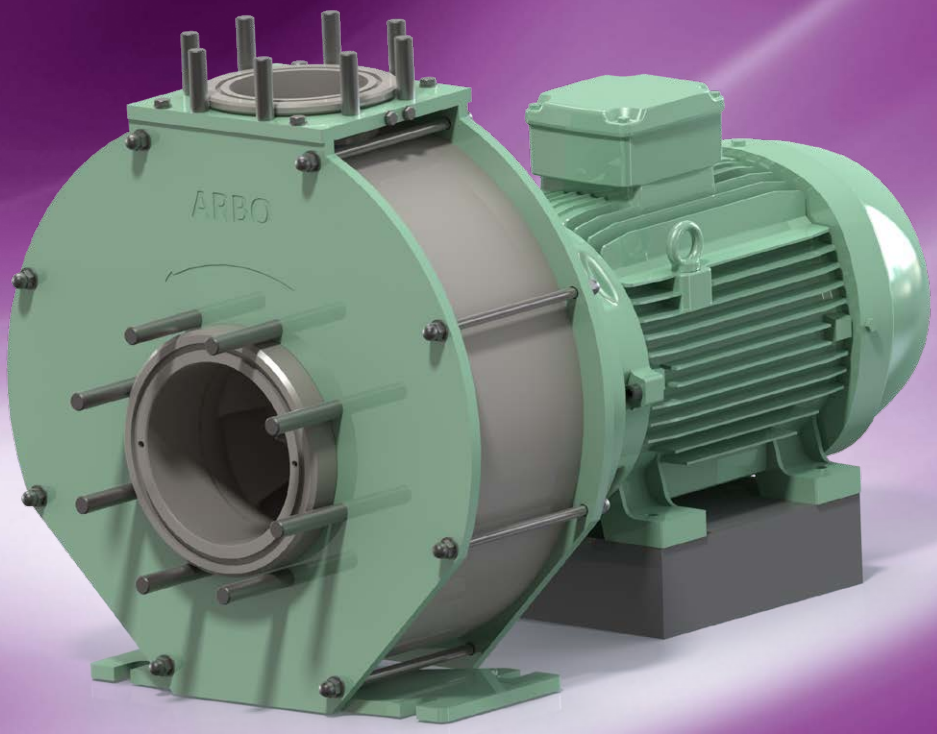

SERIE HD MODEL KR/TK | WITH MECHANICAL SEAL

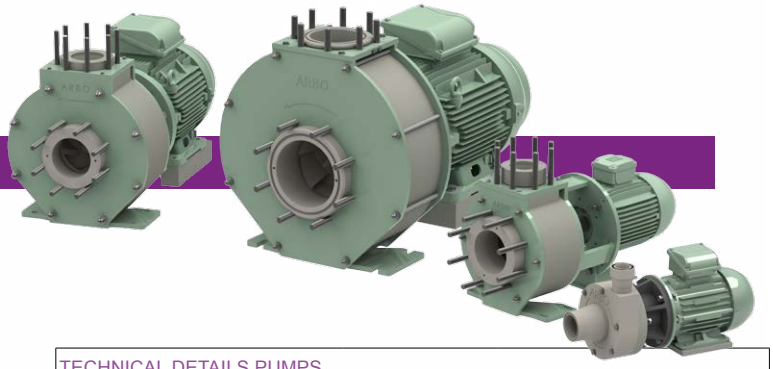

APPLICATIONS

For all transport or circulation duties of corrosive liquids, even high viscosity, with maximum efficiency.

This series of pumps is equipped with a state of the art semi-open impeller with pressure release.

It is fixed onto the shaft independent from the direction of rotation.

As from type 100-250 and above, a closed impeller for higher efficiency is standard.

MATERIALS

Standard is the material PPH that covers a very wide range of duties.

For highly abrasive liquids (high % of solids), at special order, impellers or housing parts of High modulus PE are available.

For highly corrosive mixtures at higher temperatures even a pump entirely made of PVDF or virgin PTFE is available.

TECHNICAL DETAILS PUMPS	
Design pressure	PN10 at 20 ˚C
Design standard	DIN 24.256 - EN 22585 - ISO 2858
Max. system pressure	2.5 Bar with standard seal, 10 Bar optional
Min. flow	3 m3/h
Max. flow	600 m3/h
Max. head	90 m
Max. viscosity	250 mPas
Max. solid size	3 mm

TECHNICAL DETAILS MOTORS	
Standard	Three-phase, multivoltage, TEFC
High efficiency	IE2 efficiency level acc. IEC60034-30
Duty	Continuous duty: S1
Multi Voltage up to IEC100	220-240/380-415V 50 Hz // 440-460 V 60 Hz
Multi Voltage above IEC100	380-415V/ 660V 50 Hz // 440-460 V 60 Hz
Protection class	IP55 (IEC 34-5/ NEN-EN 60034-5)
Insulation Class	“F” (ΔT=80 ˚C);
Max. ambient temperature	Ambient temperature: -30 to 40 ˚C, at 1000 m.a.s.l.
Max. relative humidity	< 95%

OPTIONAL AVAILABLE	
Other voltages	f.i. 480 V/ 3 Ph/ 60 Hz
Other insulation	f.i. Tropicalized
PTC Thermistors	on windings
Thermal or dust protection:	IP56, IP65, IP66, IPW56, IPW65 or IPW66

CONSTRUCTION

MATERIALS	ABBREVIATION	T MIN. ˚C	T MAX. ˚C
Polypropylene	PP	0	80
High Mudulus Polyethelene	HMPE	-50	80
Polyvinylidenfluoride	PVDF	-30	120
Polytetrafluorethene	PTFE	-40	140
Conductive plastics for ATEX-zones	PP/PVDF/PE-EL		

SEALS

MATERIALS	ABBREVIATION	T MIN. ˚C	T MAX. ˚C
EPDM	E	-40	150
Viton	V	-25	220
Polytetrafluoretheen	T	-190	260

ORDERING CODE (P.I.C.)

PUMP			MATERIALS						MOTOR					
Model	Discharge flange size (D)	Pump housing size	wetted parts	impeller	Seal rotor	Seal stator	Seal type	Gaskets	Pole	Power kW	Voltage	Phase	Frequency	Atex
KR	32	160	PP	PP	TG	SI		E	2	0,75, 1,1	2	1	5	EX
KRV	40	200	PVDF	PVDF	SI		PK	V	4	1,5, 2,2	3	3	6	
TK	50	250	HMPE	HMPE			2	T	6	3,0, 4,0	4			
	65						2BL		8	5,5, 7,5, 10	6			
	80									11, 15, 18,5				
	100									22, 30, 37				
	125									45, 55, 75				
	150													

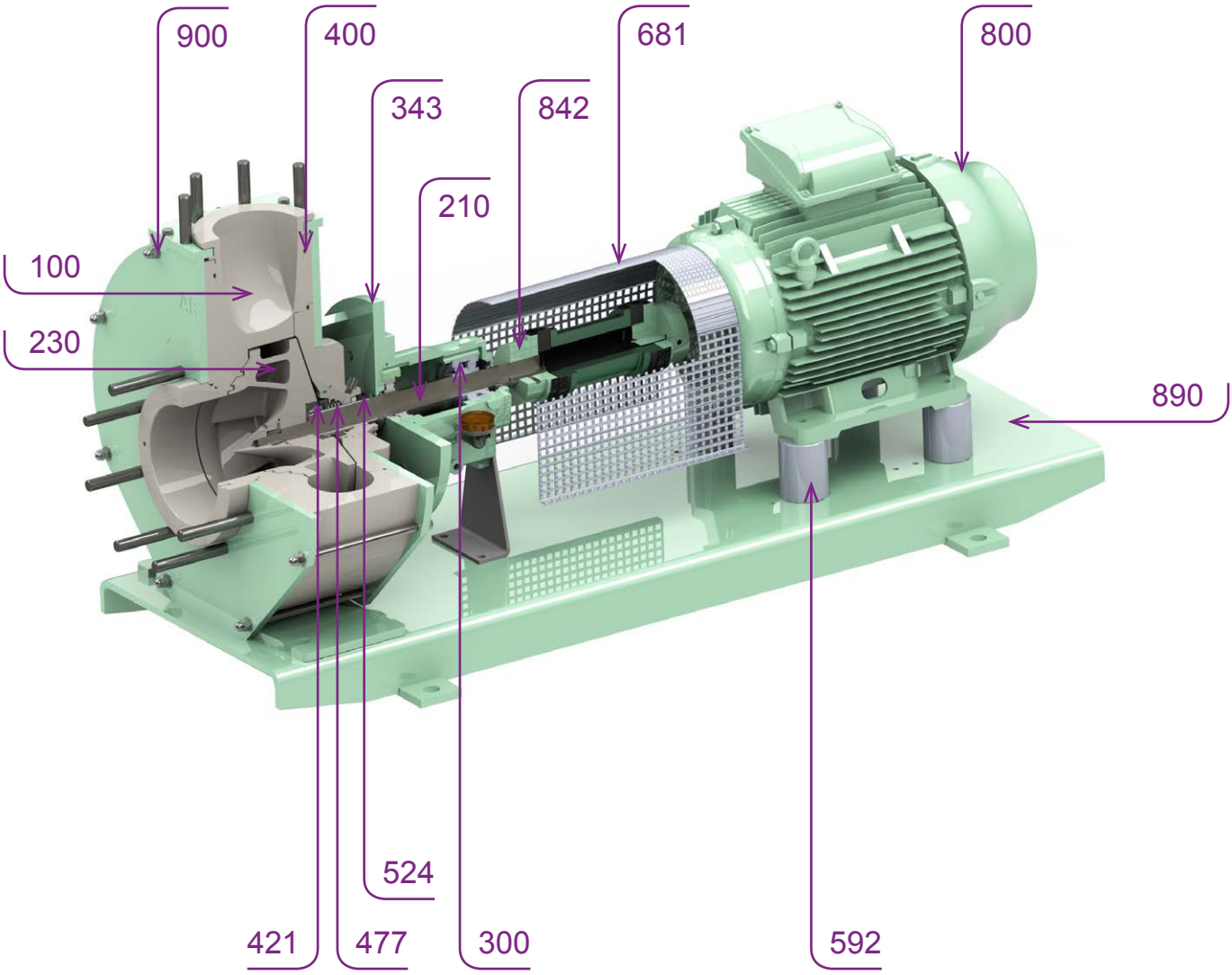

POS.	DESCRIPTION	STANDARD	OPTIONS		
100	Housing parts	PPH	HMPE	PVDF	PTFE
210	Pump shaft	SS			
230	Impeller	PPH	HMPE	PVDF	PTFE
	Impeller type	Semi-open	Closed [C]	Turbine [TW]	3-D
300	Bearing assembly complete	ST/Coated			
343	Pump bracket	ST/Coated			
400	Gaskets	EPDM	VITON	V/PTFE encapsulated	
421	Mechanical seal	PTFE-glas/SSIC	SSIC/SSIC		
	Type mechanical seal	Single inner	Bellow	Double with flush	
477	Pressure spring	Hast. C	Coated		
524	Shaft protecting sleeve	PTFE-glas			
592	Fillter plates	PP (KR) or PVC (TK)			
681	Coupling guard	Plastic	SS		
800	Motor	2, 4, 6 or 8 pole			
842	Flexible coupling				
900	Fasteners	SS			

D I M E N S I O N S / W E I G H T S **COMPACT PUMP HD MODEL KR**

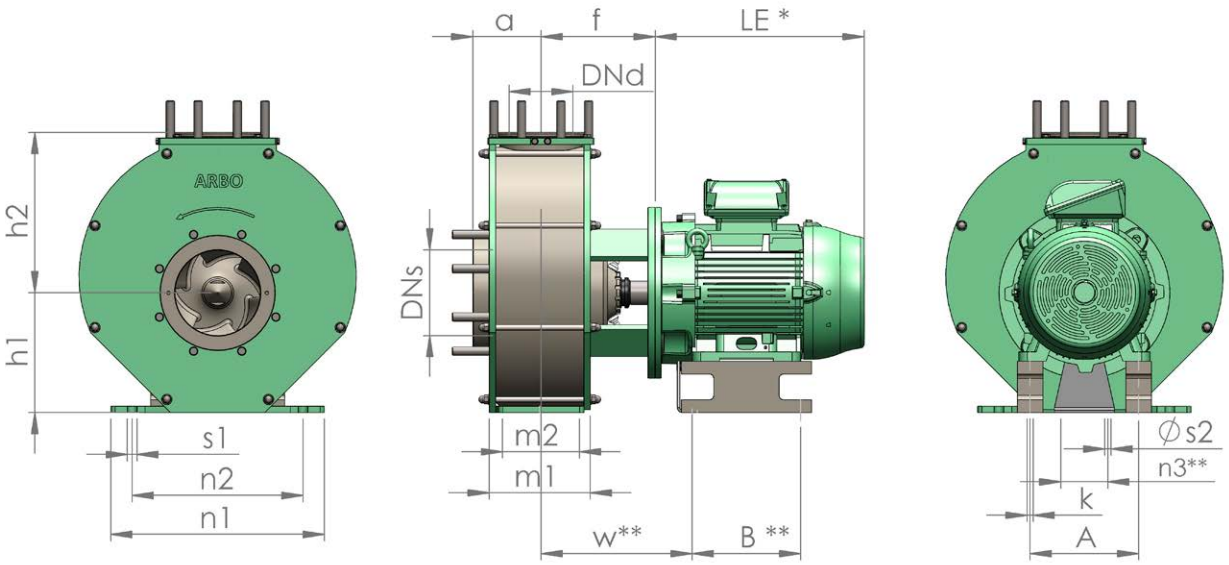

* for motor dimensions refer to separate sheet
** above IEC132 foot/flange motor is used instead of pump foot

KR-HD	DIMENSIONS AND WEIGHTS PUMP WITHOUT MOTOR (MM) *														MOTOR FRAME	KG PUMP WITHOUT MOTOR	
	a	h1	h2	m1	m2	n1	n2	n3	s1	s2	w	DNd	DNs	f	IEC	PP/PE	PVDF
KR-80-160	125	180	225	125	95	320	250	110	M12	M12	370	80	125	240	90-132	53	64
KR-80-160	125	180	225	125	95	320	250	110	M12	M12	370	80	125	240	160-200	73	84
KR-32-200	80	160	180	100	70	240	190	110	M12	M12	285	32	50	240	90-132	57	68
KR-32-200	80	160	180	100	70	240	190	110	M12	M12	285	32	50	240	160	77	88
KR-40-200	100	160	180	100	70	265	212	110	M12	M12	285	40	65	240	90-132	59	71
KR-40-200	100	160	180	100	70	265	212	110	M12	M12	285	40	65	240	160	79	91
KR-50-200	100	160	200	100	70	265	212	110	M12	M12	285	50	80	240	90-132	61	73
KR-50-200	100	160	200	100	70	265	212	110	M12	M12	285	50	80	240	160	81	93
KR-65-200	100	180	225	125	95	320	250	110	M12	M12	370	65	100	240	90-132	68	82
KR-65-200	100	180	225	125	95	320	250	110	M12	M12	370	65	100	240	160-200	88	102
KR-80-200	125	180	250	125	95	345	280	110	M12	M12	370	80	125	240	90-132	75	90
KR-80-200	125	180	250	125	95	345	280	110	M12	M12	370	80	125	240	160-200	95	110
KR-32-250	100	180	225	125	95	320	250	110	M12	M12	370	32	50	240	90-132	59	71
KR-32-250	100	180	225	125	95	320	250	110	M12	M12	370	32	50	240	160-200	79	91
KR-40-250	100	180	225	125	95	320	250	110	M12	M12	370	40	65	240	90-132	61	73
KR-40-250	100	180	225	125	95	320	250	110	M12	M12	370	40	65	240	160-200	81	93
KR-50-250	125	180	225	125	95	320	250	110	M12	M12	370	50	80	240	90-132	63	76
KR-50-250	125	180	225	125	95	320	250	110	M12	M12	370	50	80	240	160-200	83	96
KR-65-250	125	200	250	160	120	360	280	110	M16	M12	370	65	100	240	90-132	68	82
KR-65-250	125	200	250	160	120	360	280	110	M16	M12	370	65	100	240	160-200	88	102
KR-80-250	125	225	280	160	120	400	315	110	M16	M12	370	80	125	240	90-132	70	84
KR-80-250	125	225	280	160	120	400	315	110	M16	M12	370	80	125	240	160-200	90	104
KR-100-250	140	225	280	190	120	400	315	110	M16	M12	370	100	125	270	90-132	90	108
KR-100-250	140	225	280	190	120	400	315	110	M16	M12	370	100	125	270	160-200	110	128
KR-125-250	140	250	355	160	120	400	315	110	M16	M12	370	125	150	205	160-200	120	148
KR-150-250	160	280	375	200	150	500	400	110	M20	*	*	150	200	267	160-250	175	210

* for motor dimensions refer to motor specification sheet

ARBO THERMOPLASTIC PUMPS FILTERS

LONG COUPLED FULLY ASSEMBLED UNIT

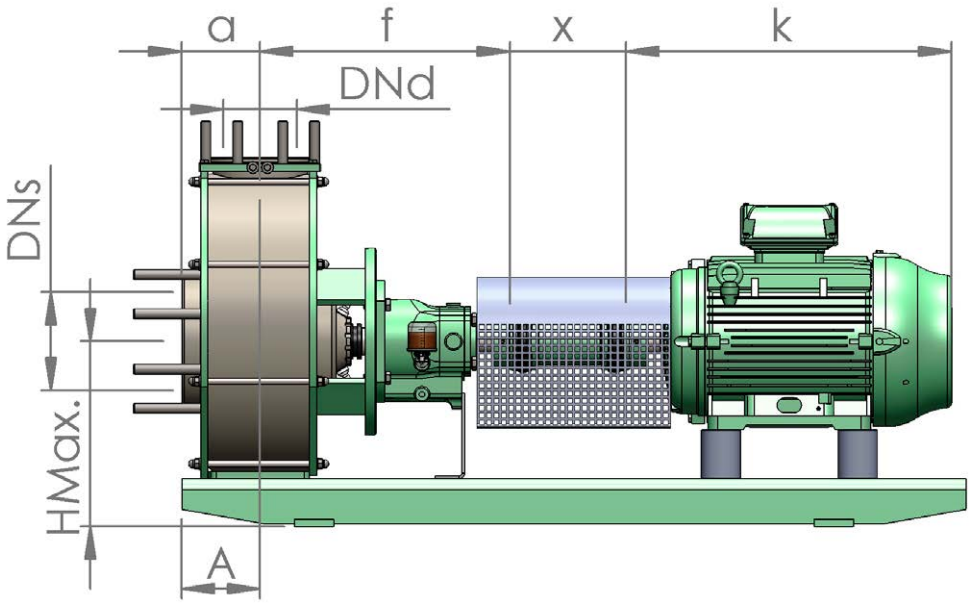

TK-HD	DIMENSIONS PUMP ASSEMBLIES						
160	a	f	x	DNd	DNs	A	Hmax
80-160	100	385	100	40	65	60	300

TK-HD	DIMENSIONS PUMP ASSEMBLIES						
200	a	f	x	DNd	DNs	A	Hmax
32-200	80	385	100	32	50	60	300
40-200	100	385	100	40	65	60	300
50-200	100	385	100	50	80	60	320
65-200	100	500	100	65	100	75	405
80-200	125	500	100	80	125	90	480

TK-HD	DIMENSIONS PUMP ASSEMBLIES						
250	a	f	x	DNd	DNs	A	Hmax
32-250	100	500	100	32	50	75	380
40-250	100	500	100	40	65	75	380
50-250	125	500	100	50	80	75	405
65-250	125	500	140	65	100	90	480
80-250	125	500	140	80	125	90	480
100-250	140	530	140	100	125	90	480
125-250	140	530	140	125	150	110	480
150-250	160	530	180	150	200	110	480

POS. 100 BARE SHAFT PUMP WITH BEARING ASSEMBLY

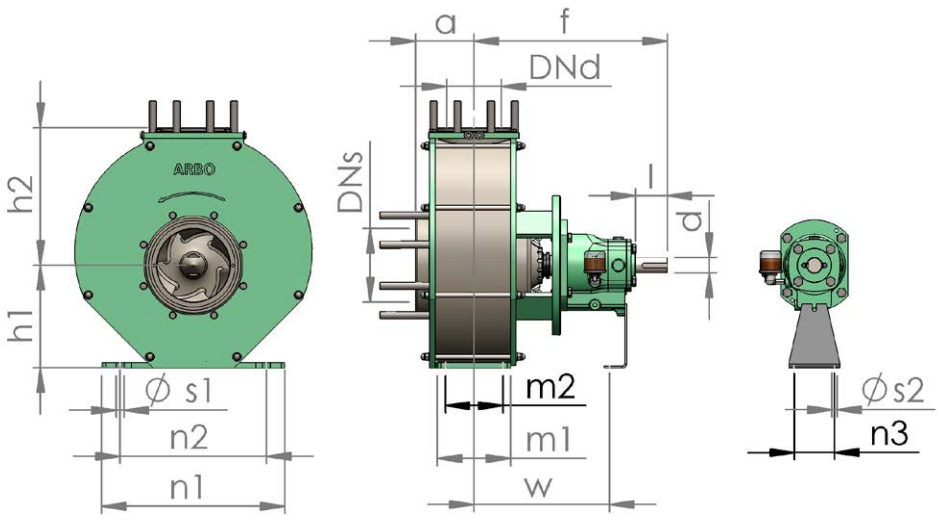

TK-HD	DIMENSIONS BARE SHAFT PUMP (MM)															WEIGHT KG*	
	a	h1	h2	m1	m2	n1	n2	n2	s1	s2	w	DNd	DNs	d	l	PP/PE	PVDF
80-160	125	180	225	125	95	320	250	250	M12	M12	370	80	125	32	80	53	64
32-200	80	160	180	100	70	240	190	190	M12	M12	285	32	50	24	50	57	68
40-200	100	160	180	100	70	265	212	212	M12	M12	285	40	65	24	50	59	71
50-200	100	160	200	100	70	265	212	212	M12	M12	285	50	80	24	50	61	73
65-200	100	180	225	125	95	320	250	250	M12	M12	370	65	100	32	80	68	82
80-200	125	180	250	160	120	345	280	280	M12	M12	370	80	125	32	80	75	90
32-250	100	180	225	125	95	320	250	250	M12	M12	370	32	50	32	80	59	71
40-250	100	180	225	125	95	320	250	250	M12	M12	370	40	65	32	80	61	73
50-250	125	180	225	125	95	320	250	250	M12	M12	370	50	80	32	80	63	76
65-250	125	200	250	160	120	360	280	280	M16	M12	370	65	100	32	80	68	82
80-250	125	225	280	160	120	400	315	315	M16	M12	370	80	125	32	80	75	90
100-250	140	225	280	190	120	400	315	315	M16	M12	370	100	125	42a	110	90	108
125-250	140	250	355	160	120	400	315	110	M16	M12	370	125	150	42b	90	120	144
150-250	160	280	375	200	150	500	400	400	M20	M20	370	150	200	42b	90	175	210

* for total weight of bare shaft pump add bearing assembly weight!

ARBO offers two different methods of lubrication:

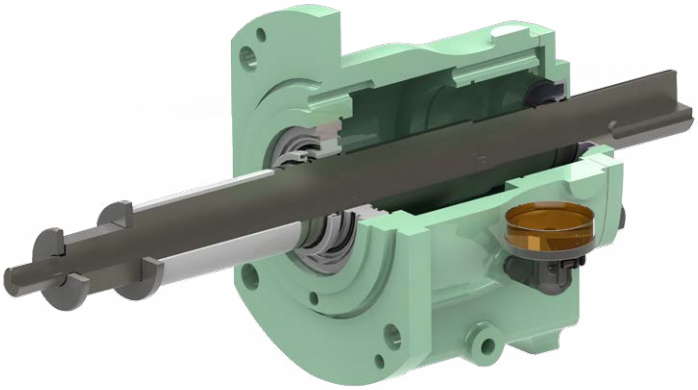

GREASE
The use of grease is primarily limited to lower motor power pumps where the parameters are in the size and speed range of rolling element bearings. To prevent the loss of grease, oil seal rings are used.

OIL BATH
A common form of bearing lubrication is direct contact. As the shaft rotates, the rolling elements in the bearing make contact with a level of oil. This rigid cast iron bearing housing comes complete with constant level oiler, large filler and drain plug.

BEARINGS
- double row angular contact bearing
- deep groove roller bearing
- easy to replace
- exact alignment

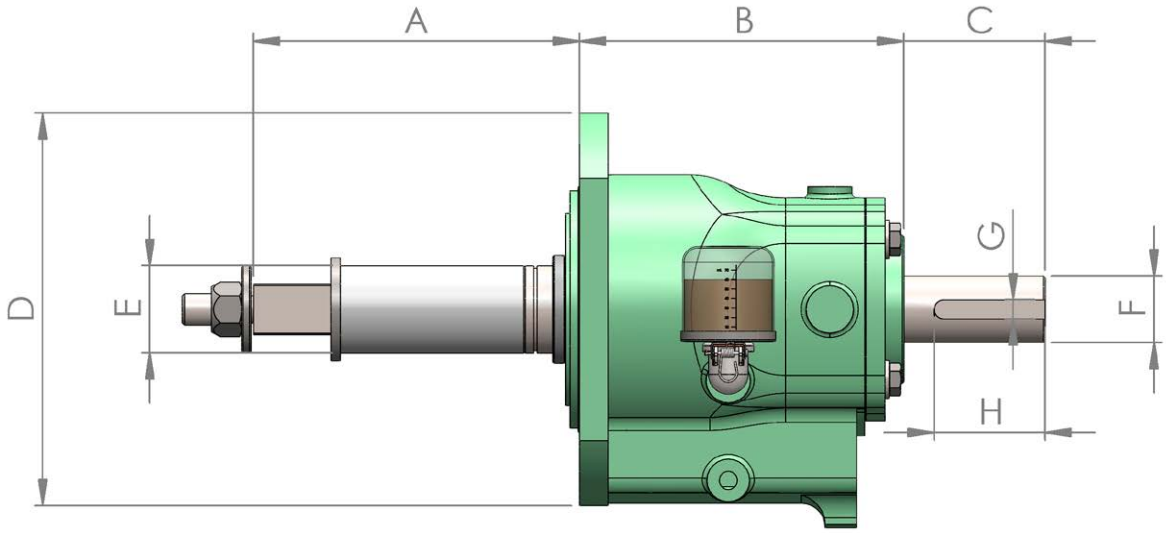

BEARING ASSEMBLY DIMENSIONS (MM)											GREASE SYSTEM
TYPE	KW MAX.	A	B	C	D	E	F	G	H	KG	
24	11	205	100	50	180	40	24	10	40	7,5	Life packed bearings
32	22	205	180	80	180	40	32	10	40	7,5	Life packed bearings
42a	37	205	180	110	180	40	42	12	55	8	Life packed bearings
42b	75	125	205	90	248	55	42	12	70	23	Oil bath lubrication

DETAILS **POS. 400 SINGLE MECHANICAL SEAL**

ARBO Pompen en Filters B.V. have a long history in seal designing. Since all our applications are corrosive of nature, there are exclusively high performance plastics or silicon carbide parts in the liquid zone.

ARBO's standard seal is a single, internal flushed rotating shaft seal.

The static seal ring is mounted in a flexible diaphragm or O-ring that compensates eventual pressure waves.

Thanks to the low pressure technology, this type of seal has a very long lifespan, even when pumping liquids that contain small particles or crystals.

The beauty of this seal is that it is applicable to roughly 80% of all our heavy duty chemical applications.

The maximum system pressure (on standstill) is 2 Bar and is re-adjustable to compensate for eventual wear.

For a system pressure of maximum 10 Bar, our unique Bellows seal made of PEEK is available.

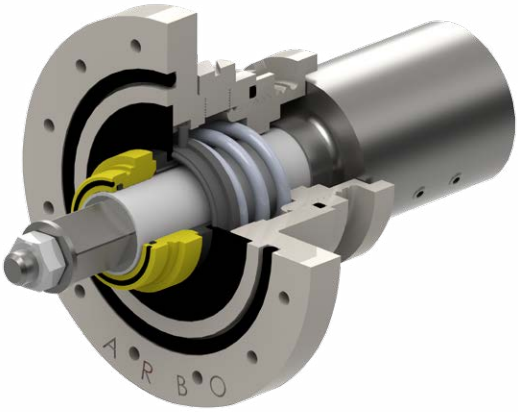

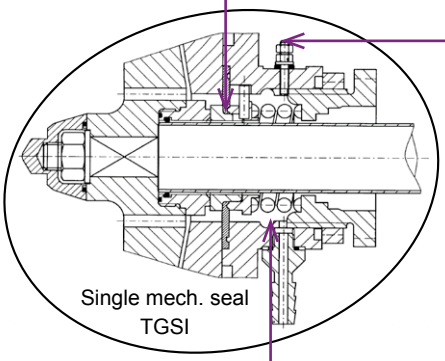

Single mech. seal
TGSI

STANDARD SAFETY FEATURE
Connectors for seal leakage that may be connected to your control system.

The pressure element ensures the optimum shaft sealing and is located outside the liquid zone.

CONSTRUCTION DATA MECHANICAL SEALS HD SERIES

SEAL TYPE	PUMP TYPES	PRINCIPLE	DESCRIPTION	MAX. HYDRO-STATIC PRESSURE BAR	MAX. OPERATING PRESSURE BAR	MAX. FLUSHING PRESSURE BAR	FLUSH L/H
				Standard		Standard	Standard
TGSI	80-160 - 100-250	single	internal Teflon/glass-Silicium carbide seal	2.5	6	-	-
SISI	80-160 - 150-250	single	internal Silicium carbide-Silicium carbide seal	2.5	6	-	-
SISIPK	80-160 - 100-250	single	internal bellow seal Silicium carbide-Silicium carbide	10	10	-	-
TGSI2*	80-160 - 100-250	double	internal TGSI seal/ external John Crane seal	2.5	6	3	50
SISI2*	80-160 - 150-250	double	internal SISI seal/ external John Crane seal	2.5	6	3	50
TGSI2BL*	80-160 - 100-250	double	internal TGSI seal/ internal John Crane seal	2.5	10	10	50
SISI2BL*	80-160 - 100-250	double	internal SISI seal/ internal John Crane seal	2.5	10	10	50

*An external flush is needed for these types!

DETAILS **POS. 400 DOUBLE MECHANICAL SEAL**

For all of the TK-HD versions and for close coupled above the KR-100-250-HD versions, a double seal with flush is available.

Typical applications for the double seal are for media:

- that have a solid particle content above 10% by weight
- that may crystallise during operation or during stand still
- contain very tiny particles
- < 10 micron that may damage the single seal surfaces

Please take notice that in order to have sufficient space to adapt the double seal, the types TK-65-160 to 50-200 need to be equipped with bearing assembly No. 32 instead of standardised type No. 24.

Like with the single seal types we offer a low and high pressure version.

The low pressure version (< 1 Bar) is used for all applications where a normal flooded suction is available without system pressures.

Again there are zero metal parts in the flush chamber and can therefore be considered 100% corrosion resistant; an advantage when wear in the front seal may contaminate the flushing liquid.

As flushing liquid normal clear water may be used or an external flushing liquid unit can be delivered to provide one or more pumps in a closed circuit with only a very tiny water consumption.

The high pressure type is mounted in the seal box and can withstand 10 Bar, ideal when normal water pressure or other supply is used.

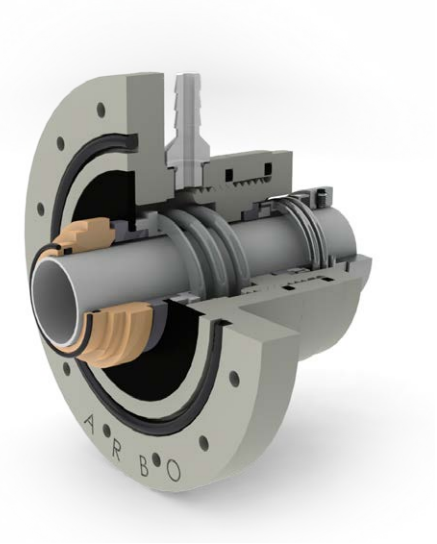

STANDARD SAFETY FEATURE
Connectors for liquid seal detection to be connected to your control system.

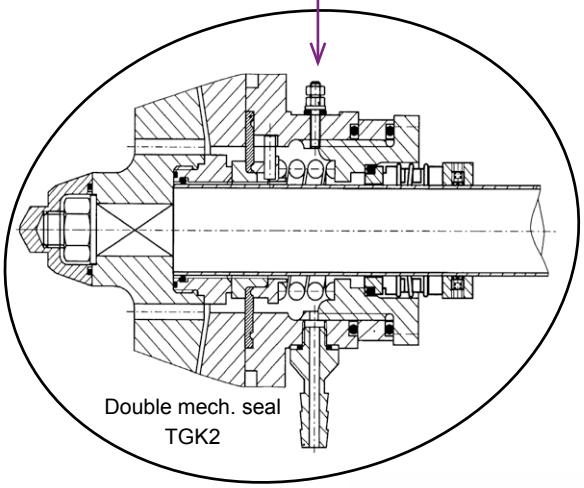

Double mech. seal
TGK2

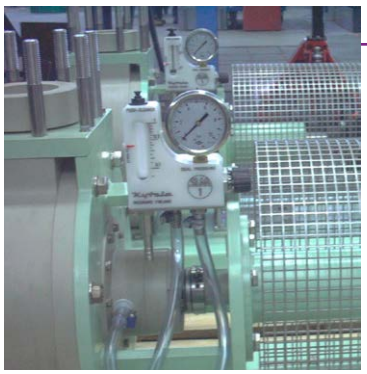

LIQUID SEAL MONITORS

In order to adjust flow rate and pressure, we advise to install Liquid seal monitors.

These devices can be mounted to the pump units in order to adjust and monitor the correct flow and pressure of the flushing liquid.

FOR KR-HD: FOOT/FLANGE MOTOR IMB35 IM2001

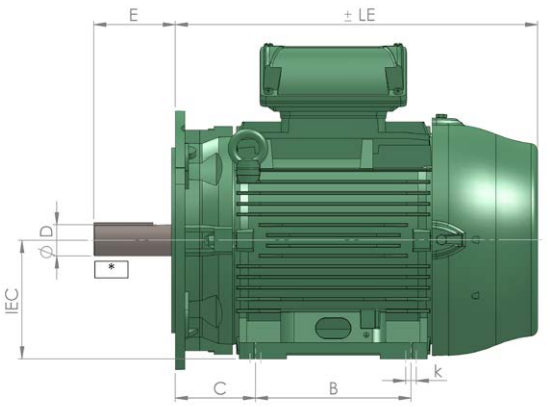

* extended motor shafts for KR-150-250

FOR TK-HD: FOOT MOTOR IMB3 IM1001

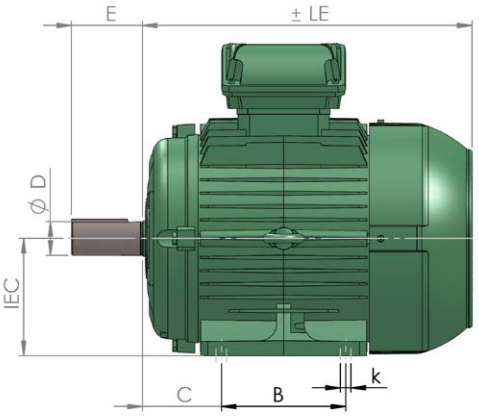

MOTOR	960 MIN-1	WEIGHT	* IN	1450 MIN-1	WEIGHT	* IN	2900 MIN-1	WEIGHT	* IN	A	B	C	k	D	E	LE
IEC	KW	+/- KG	A	KW	+/- KG	A	KW	+/- KG	A	(MM)	(MM)	(MM)	(MM)	(MM)	(MM)	(MM)
90S	-	-	-	1,1	13,1	2,4	1,5	17,5	3,14	140	100	56	10	Ø24	50	255
90L	-	-	-	1,5	22	3,26	2,2	21	4,58	140	125	56	10	Ø24	50	280
100L	-	-	-	2,2	30,5	4,64	-	-	-	160	140	63	12	Ø28	60	320
100L	-	-	-	3	33	6,17	3	28	5,92	160	140	63	12	Ø28	60	320
112M	-	-	-	4	42	8,12	4	38	7,72	190	140	70	12	Ø28	60	365
112M	-	-	-	-	-	-	5,5	60	10,5	190	140	70	12	Ø28	60	365
132S	-	-	-	-	-	-	5,5	60	10,6	216	140	89	12	Ø38	80	375
132S	-	-	-	5,5	63	10,5	7,5	63	14,1	216	140	89	12	Ø38	80	375
132M	-	-	-	7,5	72	14,1	-	-	-	216	178	89	12	Ø38	80	410
160M	7,5	113	15	11	105	21,2	11	104	20,4	254	210	108	14,5	Ø42	110	505
160M	-	-	-	-	-	-	15	112	27,6	254	210	108	14,5	Ø42	110	505
160L	11	136	22	15	125	28,7	18,5	124	33,7	254	254	108	14,5	Ø42	110	535
180M	-	-	-	18,5	165	35,1	22	164	39,1	279	241	121	14,5	Ø48	110	555
180L	15	174	27,9	22	185	40,5	-	-	-	279	279	121	14,5	Ø48	110	600
200L	18,5	214	35,7	-	-	-	-	-	-	318	305	133	18,5	Ø55	110	665
200L	22	225	42,3	30	225	56,2	30	226	53,6	318	305	133	18,5	Ø55	110	665
200L	30	359	54,4	37	237	69,2	37	255	65,8	318	305	133	18,5	Ø55	110	665
225S	37	438	66,8	37	342	66,6	-	-	-	356	286	149	18,5	Ø60	140	745
225S	-	-	-	45	363	80,7	-	-	-	356	286	149	18,5	Ø60	140	745
250S	-	-	-	55	444	97,1	-	-	-	406	311	168	24	Ø60	140	745
280S	-	-	-	75	639	133	-	-	-	457	368	190	24	Ø75	140	745

* Inominal at 400 V / 3 Ph / 50 Hz

ARBO THERMOPLASTIC PUMPS FILTERS

POS. 842 SPACER COUPLINGS

FEATURES

- Light weight spacer body
- Practically no downtime or maintenance cost
- Fully machined flanges and spacer body
- Phosphatised metal parts
- Interchangeable coupling parts
- Easy (dis)-assembly
- Dynamic balancing not required
- Permits straight edge alignment
- No lubrication required
- Assembly is spark proof

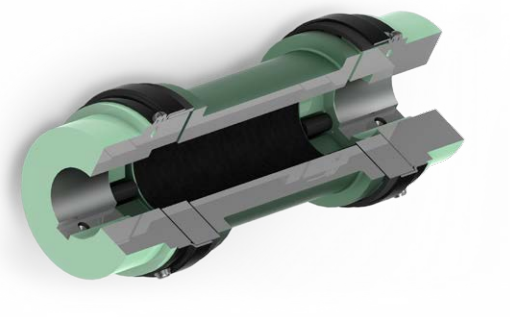

MATERIALS OF CONSTRUCTION	TYPE/MATERIAL	ABBREVIATON	STANDARD
Flange	100-190/ Cast Iron	CI	BS 1452-61 GR12
Flange	226-276/ Cast Iron	CI	BS 1452-61 GR14
Spacer	100-226/ Aluminium	ALU	BS 1490-LM 4
Spacer	276/ Cast Iron	CI	BS 1452-61 GR14
Ring set	Mild steel	MS	BS 970
Swift spider	Synthetic rubber 80o shore	NBR	ASTN 2000-280

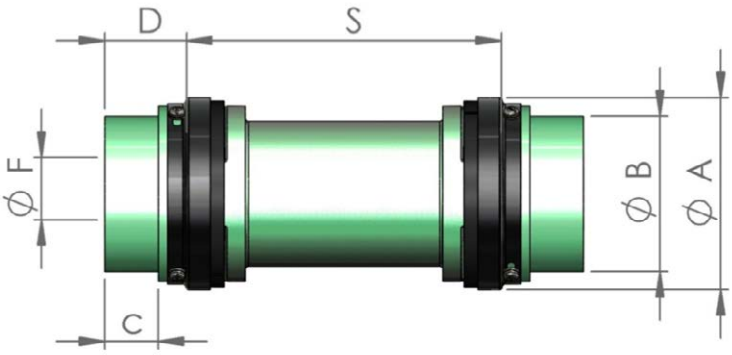

FLEXIBLE SPACER COUPLING DETAILS										SPEED MIN-1					
	BORE F						S (SPACER LENGTH)/KG			750	1000	1500	1800	3000	3600
Type	**min.**	**max.**	**A**	**B**	**C**	**D**	**100**	**140**	**180**	**Kw max.**					
100	10	38	78	65	22	35	2	2,2	-	3,6	4,9	7,3	8,8	14,6	17,5
110	15	42	96	76	30	43	4,1	4,4	-	6,9	9,2	13,8	16,6	27,6	33,2
190	20	60	129	102	35	54	8,8	9,6	10	14,9	19,9	29,8	35,8	59,7	71,6
226	25	70	153	119	54	70	-	-	16,4	24,9	33,2	49,8	59,7	99,6	119,0
276	25	75	173	130	42	60	-	-	31,5	41,4	55,2	82,8	99,3	166,0	199,0

POS. 890 BASEMENTS ACC. DIN24.259 FOR TK-HD

MOTOR IEC	90S	90L	100L	100L	112M	132S	132S	132M	132M	160M	160M	160L	180M	180L	200L	200L	225S	225S	250S	280S
kW for 6-pole	1,1	1,5	2,2	3	4	5,5	-	7,5	11	11	-	15	18,5	22	30	-	37	-	-	-
kW for 4-pole	1,1	1,5	2,2	3	4	5,5	-	7,5	11	11	-	15	18,5	22	30	-	37	45	55	75
kW for 2-pole	1,5	2,2	-	3	4	5,5	7,5	-	11	11	15	18,5	22	-	30	37	-	-	-	-

PUMP TYPE	BASEPLATE TYPE																			
80-160	4	4	6	6	6	6	6	6	6	6	6	6	6	6	8	-	-	-	-	-
32-200	4	4	4	4	4	4	4	4	4	6	6	6	6	6	8	-	-	-	-	-
32-250	4	4	4	4	4	6	6	6	6	6	6	6	6	6	8	8	-	-	-	-
40-200	4	4	4	4	4	4	4	4	4	6	6	6	6	6	8	8	-	-	-	-
40-250	4	4	4	4	4	6	6	6	6	6	6	6	6	6	8	8	-	-	-	-
50-200	4	4	4	4	4	4	4	4	4	6	6	6	6	6	8	8	-	-	-	-
50-250	4	4	4	4	4	6	6	6	6	6	6	6	6	6	8	8	8	8	-	-
65-200	4	4	6	6	6	6	6	6	6	6	6	6	6	8	8	8	8	8	-	-
65-250	6	6	6	6	6	6	6	6	6	6	6	6	6	8	8	8	8	8	8	-
80-200	6	6	6	6	6	6	6	6	6	6	6	6	6	8	8	8	8	8	8	-
80-250	6	6	6	6	6	6	6	6	6	6	6	6	8	8	8	8	8	8	8	9
100-250	6	6	6	6	6	6	6	6	6	8	8	8	8	8	8	8	8	8	8	9
125-250	-	-	-	-	-	-	-	-	8	8	8	8	8	8	8	8	8	8	8	9
150-250	-	-	-	-	-	-	-	-	8	8	8	8	8	8	8	8	8	8	8	9

ARBO baseplates no. 4 and 6 are manufactured of Glass Fibre Reinforced plastic (GRP).

These belong to the highest chemical standard in the market. Thanks to a rigid steel core, the stability of these plates is outstanding. Even after heavy transport, minor alignment issues will occur.

The larger baseplates are made of steel with a highly corrosion resistant powder coating.

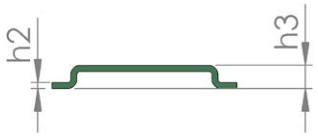

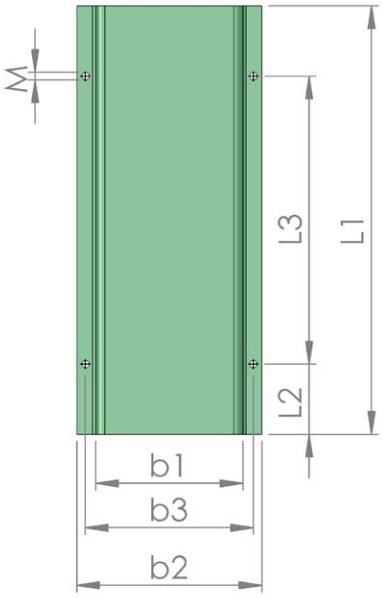

BASEPLATE SIZES (MM) ACCORDING DIN24 259				
NR.	**4**	**6**	**8**	**9**
L 1	1000	1250	1600	1800
L 2	170	205	270	300
L 3	660	840	1060	1200
b 1 max.	340	430	530	600
b 2	450	540	660	730
b 3	400	490	600	670
h 2	9	9	15	15
h 3	68	68	97	130
d	24	24	28	28
M	M20	M20	M24	M24
KG	40	57	112	186

POS. 890 BASEMENTS ACC. DIN24.259 FOR HD MODEL KR

For the close coupled series (model KR), that do not require precise alignment, ARBO offers lightweight and cost attractive baseplates.

The major advantage of using a baseplate are that pump and/or motor foot is not in direct contact with the floor. Especially on factory floors there may be chemical spills that will normally cause corrosion to the metal parts.

By placing a corrosion resistant baseplate, the setup will last longer, look better and eventually save cost!

It is also a professional method to combine a priming vessel or suction strainer together with a pump to one ready to install set.

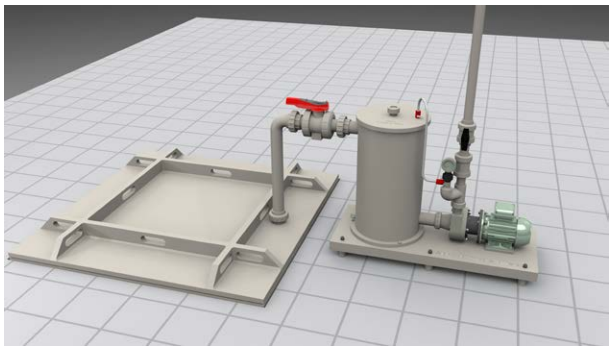

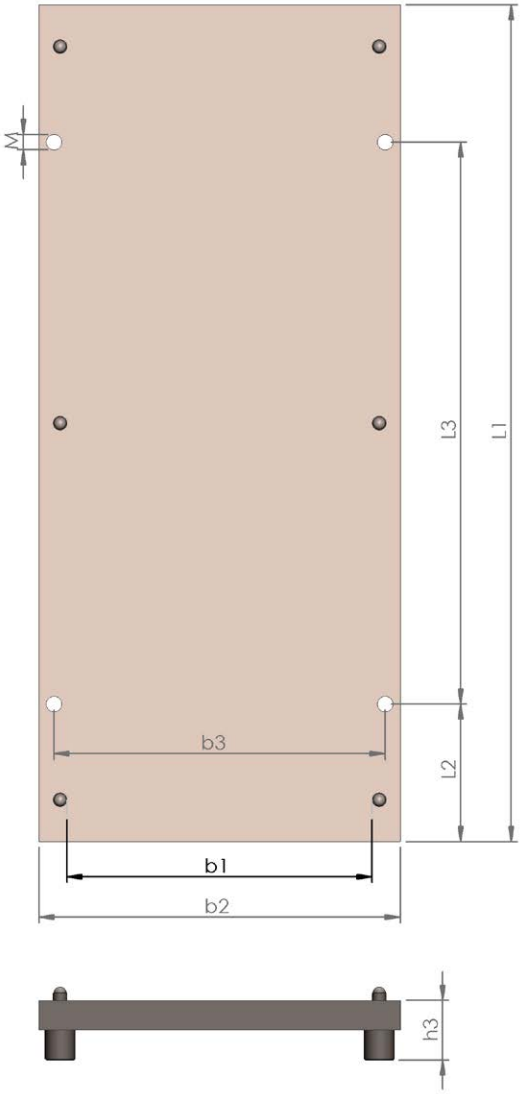

BASEPLATE SIZES (MM) ACCORDING DIN24 259						
NR.	1	3	4	6	7	8
L 1	560	900	1000	1250	1400	1600
L 2	100	150	170	205	230	270
L 3	340	600	660	840	940	1060
b 1 max.	170	300	340	430	480	530
b 2	260	390	450	540	610	660
b 3	220	350	400	490	550	600
h 3	75	75	90	90	100	100
M	M16	M16	M20	M20	M24	M24
KG	1,8	2,9	2,0	2,3	2,5	2,9

EXPORT PACKINGS FOR HD MODEL KR

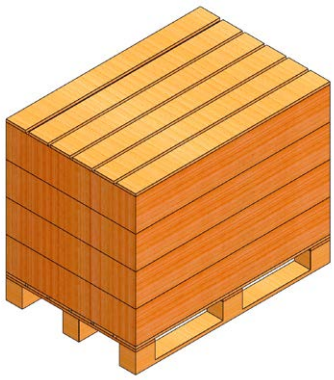

All HD model KR pumps up to type KR-100-250-IEC-132 are packed in a closed wooden crate.

HD model TK pumps packing details on enquiry.

KR-HD	MOTOR FRAME	PALLET SIZE CM			VOLUME	PALLET
TYPE	IEC	L	W	H	M3	KG
KR-80-160	90-132	120	80	75	0,72	55
KR-80-160	160-200	120	80	75	0,72	55
KR-32-200	90-132	120	80	75	0,72	45
KR-32-200	160	120	80	75	0,72	45
KR-40-200	90-132	120	80	75	0,72	45
KR-40-200	160	120	80	75	0,72	45
KR-50-200	90-132	120	80	75	0,72	45
KR-50-200	160	120	80	75	0,72	45
KR-65-200	90-132	120	80	75	0,72	55
KR-65-200	160-200	120	80	75	0,72	55
KR-80-200	90-132	120	80	75	0,72	55
KR-80-200	160-200	120	80	75	0,72	55
KR-32-250	90-132	120	80	75	0,72	55
KR-32-250	160-200	120	80	75	0,72	55
KR-40-250	90-132	120	80	75	0,72	55
KR-40-250	160-200	120	80	75	0,72	55
KR-50-250	90-132	120	80	75	0,72	55
KR-50-250	160-200	120	80	75	0,72	55
KR-65-250	90-132	120	80	75	0,72	55
KR-65-250	160-200	120	80	75	0,72	55
KR-80-250	90-132	120	80	75	0,72	55
KR-80-250	160-200	120	80	75	0,72	55
KR-100-250	90-132	120	80	75	0,72	55

KR/TK-HD	MOTOR FRAME	WOODEN BOX SIZE CM			VOLUME	PACKING
TYPE	IEC	L	W	H	M3	KG
KR-100-250	160-200	160	120	100	1,92	180
KR-125-250	160-250	160	120	100	1,92	180
KR-150-250	160-250	160	120	100	1,92	180

KR/TK-HD	BASEMENT NO.	WOODEN BOX SIZE CM			VOLUME	PACKING
TYPE	IEC	L	W	H	M3	KG
TK-HD	4 - 6	160	120	100	1,92	224
TK-HD	8 - 9	215	145	100	3,12	224

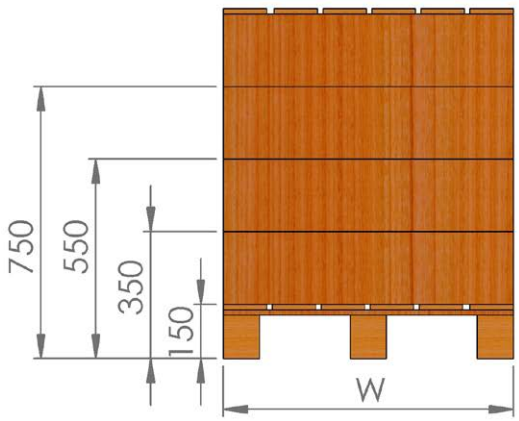

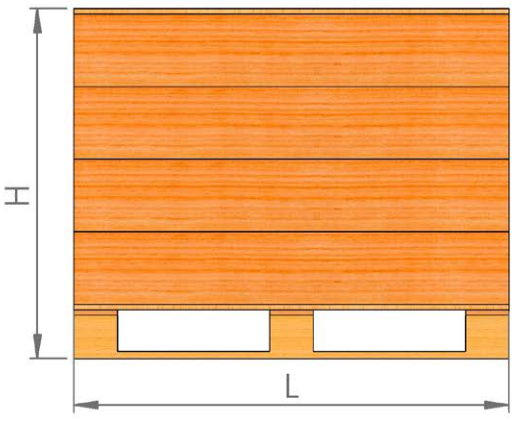

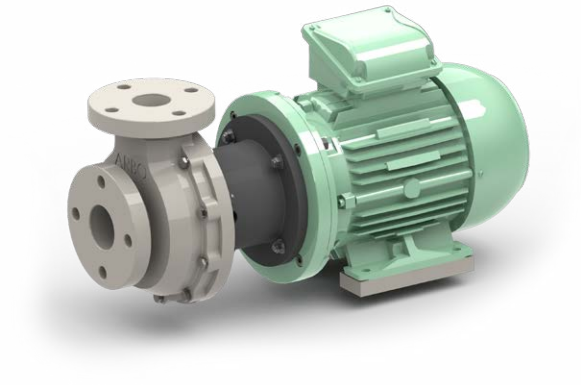

COMPACT SERIES SEALPRO
MODEL KR UP TO 50 M3/H
This series is close-coupled. The pump is mounted directly to the motor flange by means of a plastic bracket. This compact execution is perfectly suited as stationary pump or for use in machines.

COMPACT SERIES CHEMICAL STANDARD
HD MODEL KR UP TO 600 M3/H
Again this series is close-coupled, but the bracket is made of metal for maximum stability. This compact execution, thanks to a reduced number of wear parts compared with conventional long-coupled pumps, requires less maintenance and related expenses. It is optional available in a vertical execution Model KRV.

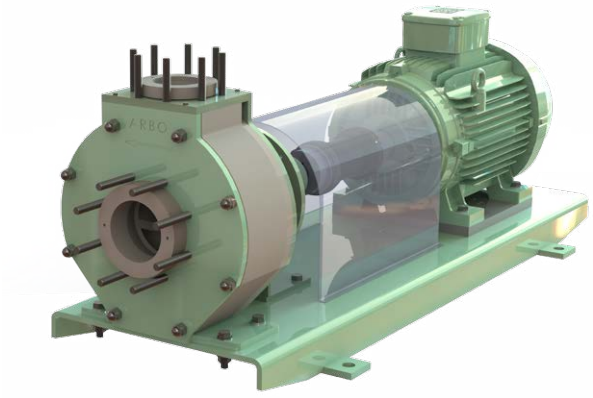

LONG COUPLED SERIES CHEMICAL STANDARD
HD MODEL TK UP TO 600 M3/H
This configuration consists of a bare shaft pump, fully assembled with a standard motor and flexible coupling on a normalized glass fiber-reinforced polyester base plate according DIN 24.259. Thanks to the design according to the “back pull out” system, the total mechanical part of the pump can be removed without disassembling the piping or motor. Therefore it is easy to open the pump for cleaning, inspection or maintenance. The alignment is not disturbed and no unnecessary work or costs is created.

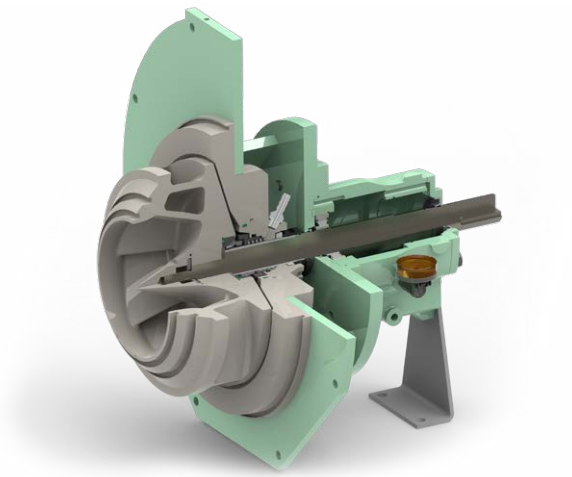

CHEMICAL PUMPS

- For all applications where metal pumps suffer from corrosion.
- Interchangeable with metal pumps thanks to normalized connections.
- Machined completely from solid blocks of plastic.
- No injection molding or welding involved – no chemical cracking!
- No metal parts in the liquid – extremely corrosion resistant.
- The highest chemical resistance. Close (KR) and long (TK) coupled configurations.
- Horizontal or vertical mounting. Special configurations for abrasive liquids.
- For plastic pumps unique new hydraulic
  - Very smooth operation and low noise level.
  - Increased efficiency
  - Lower NPShr – improved suction capabilities.
  - reduced clogging.
  - Direction independent impeller fixation.
  - Particles up to Ø 3 mm without damage.
  - Flow rates (Q) up to 600 m³/h.
  - Flow rates (h) up to 90 m.

ARBO
THERMOPLASTIC
PUMPS
FILTERS

WHY **ARBO** PUMPS | FILTERS?

ARBO Pumps | Filters can be characterized by reliability, flexibility, quality and sustainability. Thanks to the smart design, the lower energy consumption and maintenance costs, your investment urn back time is very short time!

MARKETS

- Hot tub galvanising
- Anodising
- Plating
- Production of micro-electronic and semi-conductors
- Waste water treatment
- Fish farms
- Sea water aquaria
- Desalination plants
- Industrial and agricultural scrubbers
- etc.

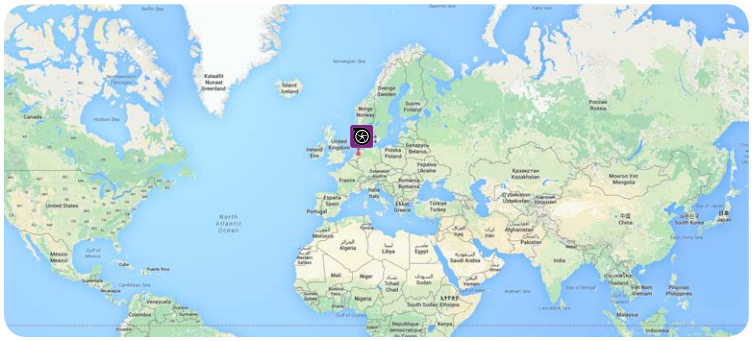

ARBO
POMPEN EN FILTERS B.V.

Leemdijk 2
9422 CL SMILDE
THE NETHERLANDS

T : +31 (0) 592 430 310

E : info@arbo-pumps.com
I : www.arbo-pumps.com

DISTRIBUTED BY:

PG 1.2 Serie HD model KR/TK / 16001 EN