UTS evo

CDR® Pompe s.r.l.

UTS evo

// EVOLUTION FOR US IS A NATURAL MATTER //

Many geniouses and luminaries, such as Leonardo Da Vinci, have spent their lives seeking perfection and reflecting it in their projects, through an intensive study of the divine proportion.

Using the same philosophy, CDR also pursue the perfection without compromises in its products.

This is the fundamental that connects our milestones, an EVOLUTION that has pushed us to overcome traditional systems, leading us to be among the pioneers of magnetic drive technology.

// ... //

And now
A step beyond...

Thanks to the magnetic drive technology, the rotating motion is transmitted without any mechanical contact, simply by exploiting the attraction of the magnetic fields.
Without any joint or sealing, it is achieved a complete liquid containment, eliminating risks of dangerous leakages: the safest system for the operator, as well the most respectful for the environment.

EVOlution phase two: we are proud to make a further step beyond and introduce you the new UTS EVO.

UTS
evo

UTS

Bareshaft version
“back pull out”.
Baseplate installation
couplings and coupling
guards motor frame B3.

Principles of the
magnetic drive (Magnetic drive concept)

The torque is transmitted from the shaft to the impeller thanks to the magnetic coupling: the external magnet (connected to the motor) drives the internal magnet (solid to the impeller), without any direct or physical contact. The transmission of the rotating motion to the impeller is ensured by just magnetic forces of attraction / repulsion between the two magnets. An isolation shell guarantees the complete isolation of the pumping liquid from the external environment.

evo

Evolution of the UTS range introduced in 1996, the new UTS is now redesigned and updated (upgraded) with new features that make it more competitive, reliable, with enhancing performances.

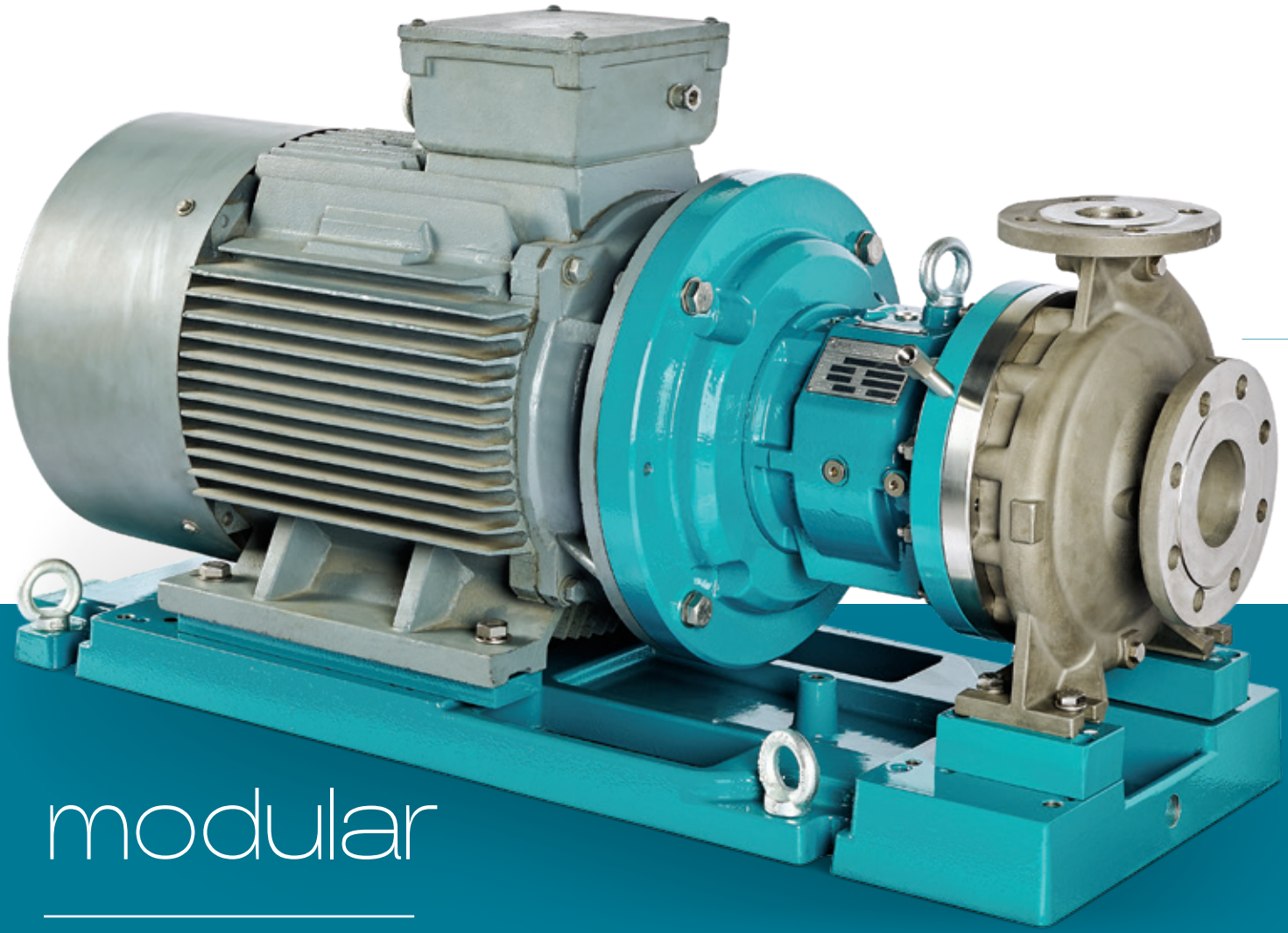

UTS-B

Close-coupled version with standard motor frame B5, now also available with motor frame B35 New baseplate.

modular

New magnetic couplings: excellent performance even in case of pumping high viscous liquids.

design

Ideal solution for handling toxic, flammable and dangerous liquids. Thanks to the internal ATEX certification, also suitable to handle non-conductive liquids.

UTS evo

Application Fields

Distillation processes

Raw chemical processes Operation h24

Fine chemistry processes

Thermoregulation

Tank loading / Unloading

Pharma-Chemical Industries

Painting standards

Cast iron surfaces are protected by 3 paint layers (total 240 microns):

- First layer: epoxy primer paint;
- Intermediate layer: Amide-vinyl primer;
- External layer: Epoxy paint;

RAL 5021 color
(all colors available on request)

Painting standard available:

- Standard EN ISO 12944-5 C4M syst. A4.14
- On request EN ISO 12944-5 C4H, C5I, C5M

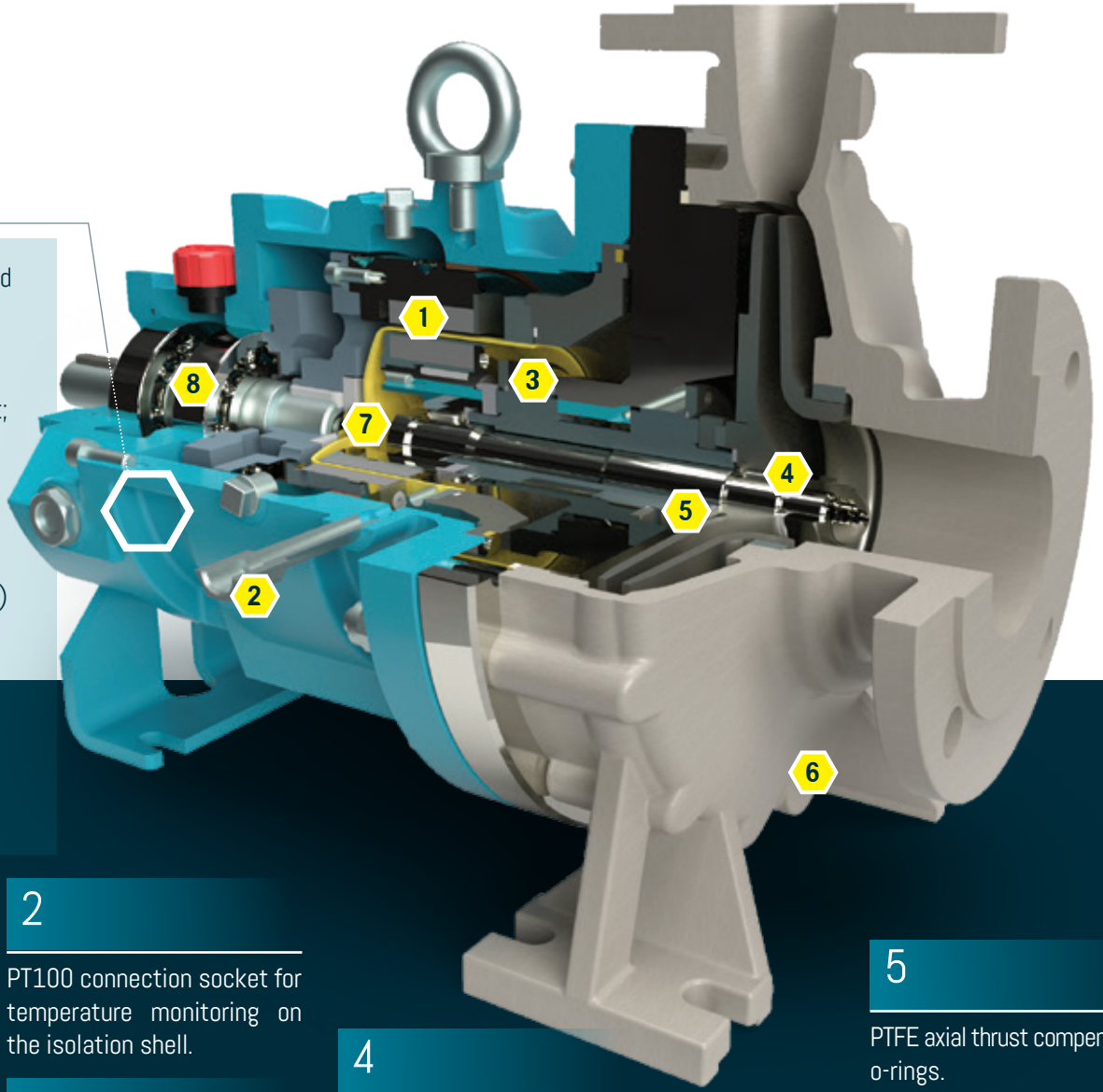

Internal magnet: different magnet design guarantees improved performances with viscous liquids.

1

Magnets can be in SmCo or NdFeBo according to the temperature of the pumped fluid. Different magnet lengths allow to optimize the power consumption.

2

PT100 connection socket for temperature monitoring on the isolation shell.

3

The internal flushing channels allow the efficient removal of the heat generated by bushes friction and isolation shell eddy currents.

4

The shaft with a central flushing channel allows the correct internal circulation of the liquid, from the rear isolation shell to the front volute casing.

5

PTFE axial thrust compensation o-rings.

6

Threaded casing drain as a standard.

7

An isolation shell in Hastelloy-C 276 guarantees excellent corrosion resistance. With 3 different sizes efficiency is remarkably improved.
Also available in ZrO2.

8

Available on request heatsink and bearing protection with no-contact labyrinth seals.

UTS evo

Construction Details

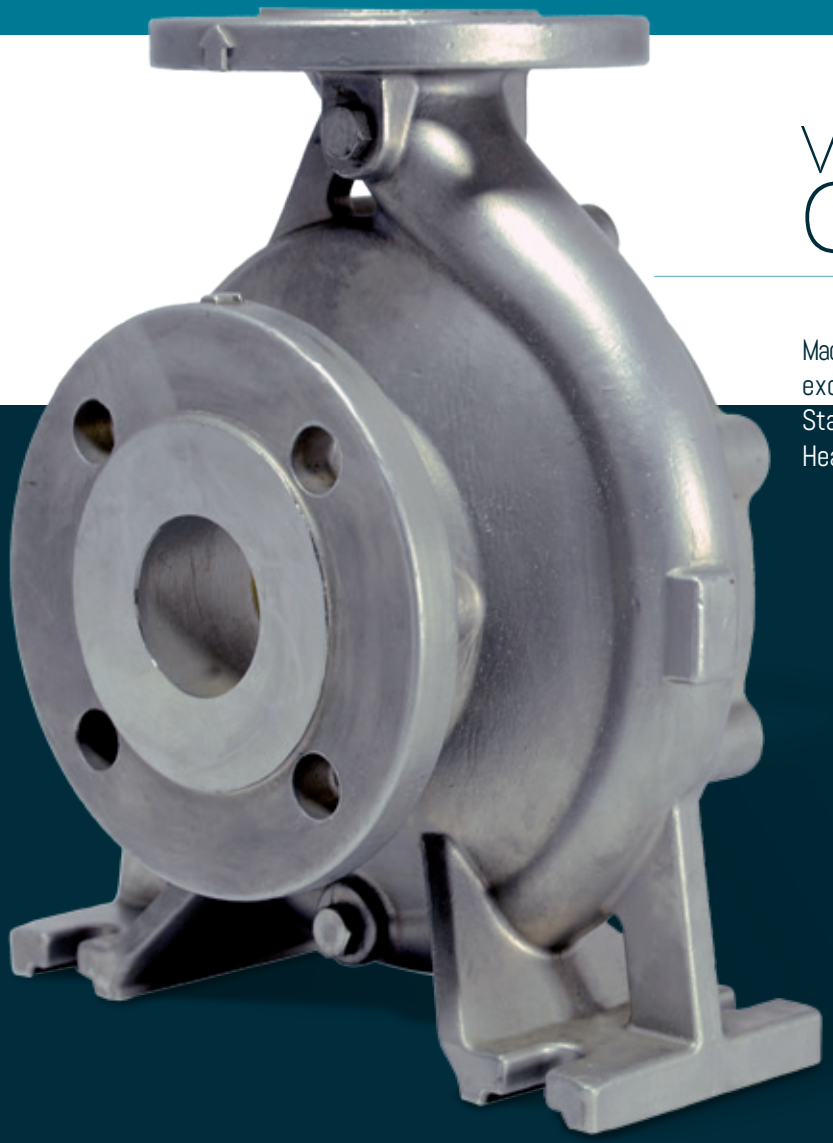

Volute Casing

Made in cast steel AISI 316, it ensure excellent corrosion resistance.
Standard threaded drainage.
Heating jacket available on request.

Impeller

Made in cast steel AISI 316 (14408), it guarantees excellent and precise vanes profile design and corrosion resistance.

The counter-vanes reduce the axial thrusts and, as consequence, the wear of the internal components.

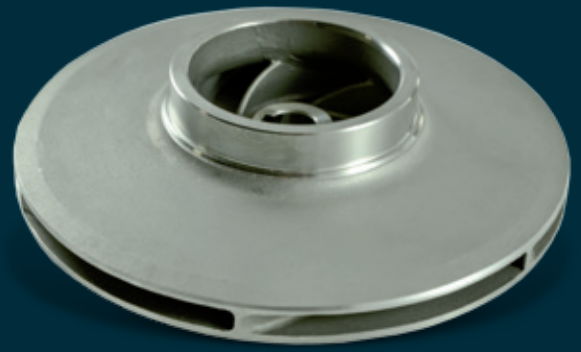

Static and Rotating Bushes

The rotating shaft is mounted inside a SIC bush, supported by 2 static bushes: this configuration guarantees high reliability in continuous service, distributing correctly the axial and radial thrusts.

PTFE compensating rings guarantee high resistance to the impeller axial thrusts.

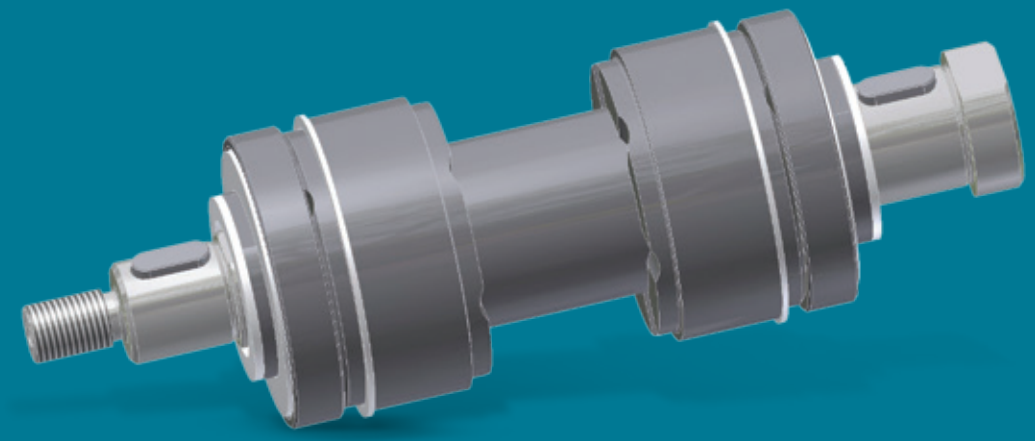

Bushes Support

Flanged bushes support, also available in a pre-assembled kit with bushes already installed, for a quick and safe maintenance.

UTS evo

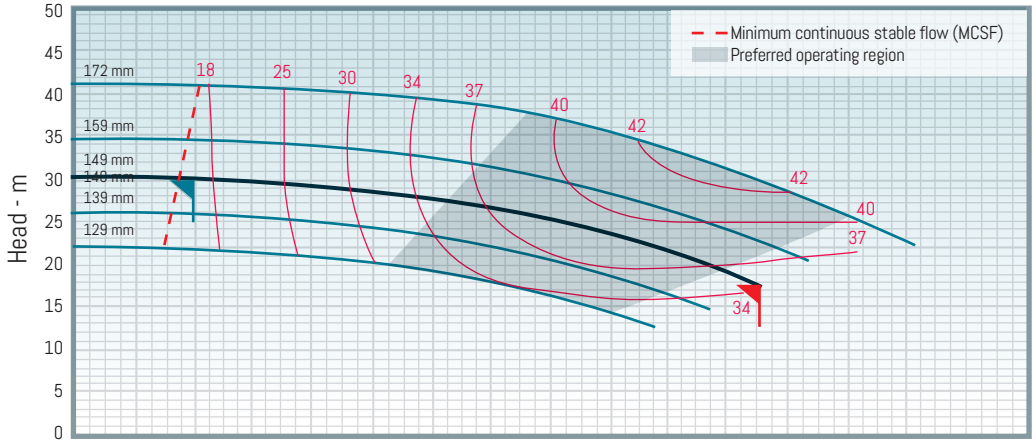

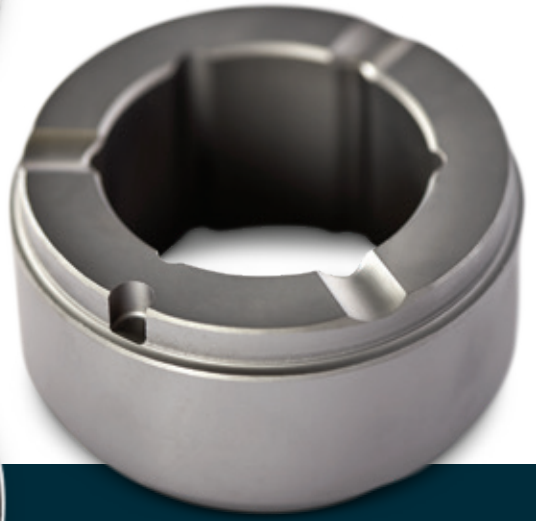

Diamond Coated
SIC bushes:

In case of high risk of dry running, it is available on request a kit (shaft / bushes / axial thrusts) in diamond-coated SiC (RSSICtm). The surface treatment grants both hardness and a friction reduction of about 80% (0.04 µrs of RSSiC versus 04 - 0.7 µrs of SiC).

Other critical working conditions on which RSSiC increases reliability and pump life-time are:

- Pumping of low boiling liquids
- Operation at low flow rates (near MCSF): the heat generated by the magnetic coupling (eddy current) is not completely dissipated by the process fluid recirculation
- Operation at high flow rates (beyond the BEP): under these conditions it may occur either a cavitation or a not correct heat dissipation in the rear area of isolation shell, as discharge pressure is low.

New Magnetic Couplings

The redesign of the 3 magnetic couplings improve the efficiency, demanding less energy for the same duty. The Isolation shells are made by flow-forming, to avoid any internal material tension. The flow-breaking seat on the bottom of the isolation shell avoids the formation of liquid vortex inside the pump PT100 connection socket for temperature monitoring as a standard.

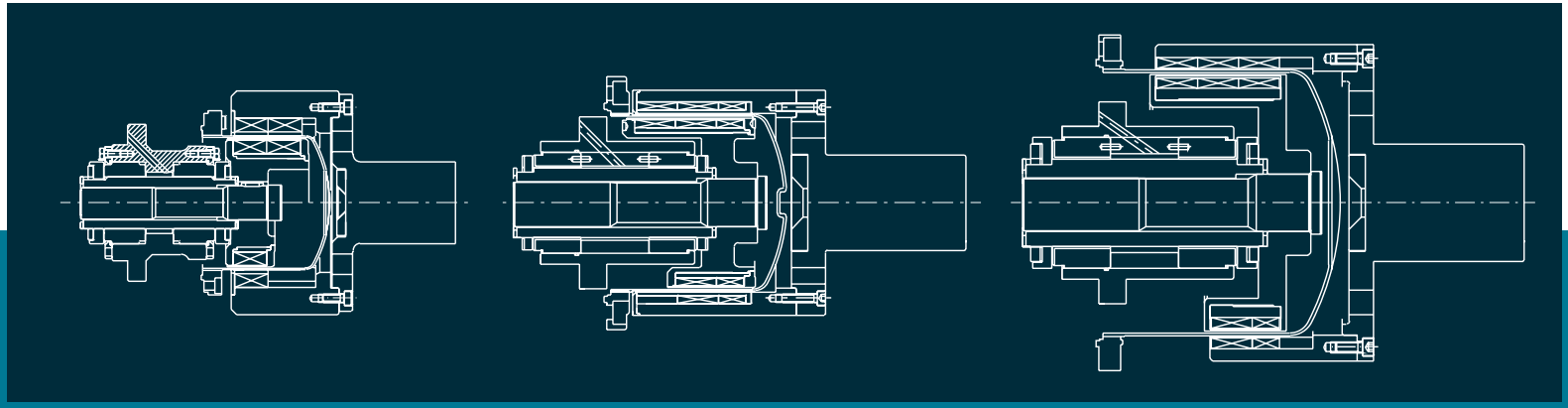

Coupling “125”

Max power 18,5kW*

Coupling “160”

Max power 37kW*

Coupling “250”

Max power 90kW*

*2900 rpm

UTS
evo

Zirconium oxide
and energy saving.

In order to eliminate the eddy currents generated by the Hastelloy Isolation shell, a zirconium oxide ZrO2 isolation shell is available upon request

Advantages of the ZrO2 Isolation shell:

- Reduction of absorbed power up to 25%, resulting in the increase in pump efficiency.
- Removal of the Joule effect caused by eddy currents.
  This is essential in all cases where pumping low-boiling fluids or liquids subject to evaporation
- Preservation and stability of the liquid temperature, in conditions where duty is close to the admissible minimum flow

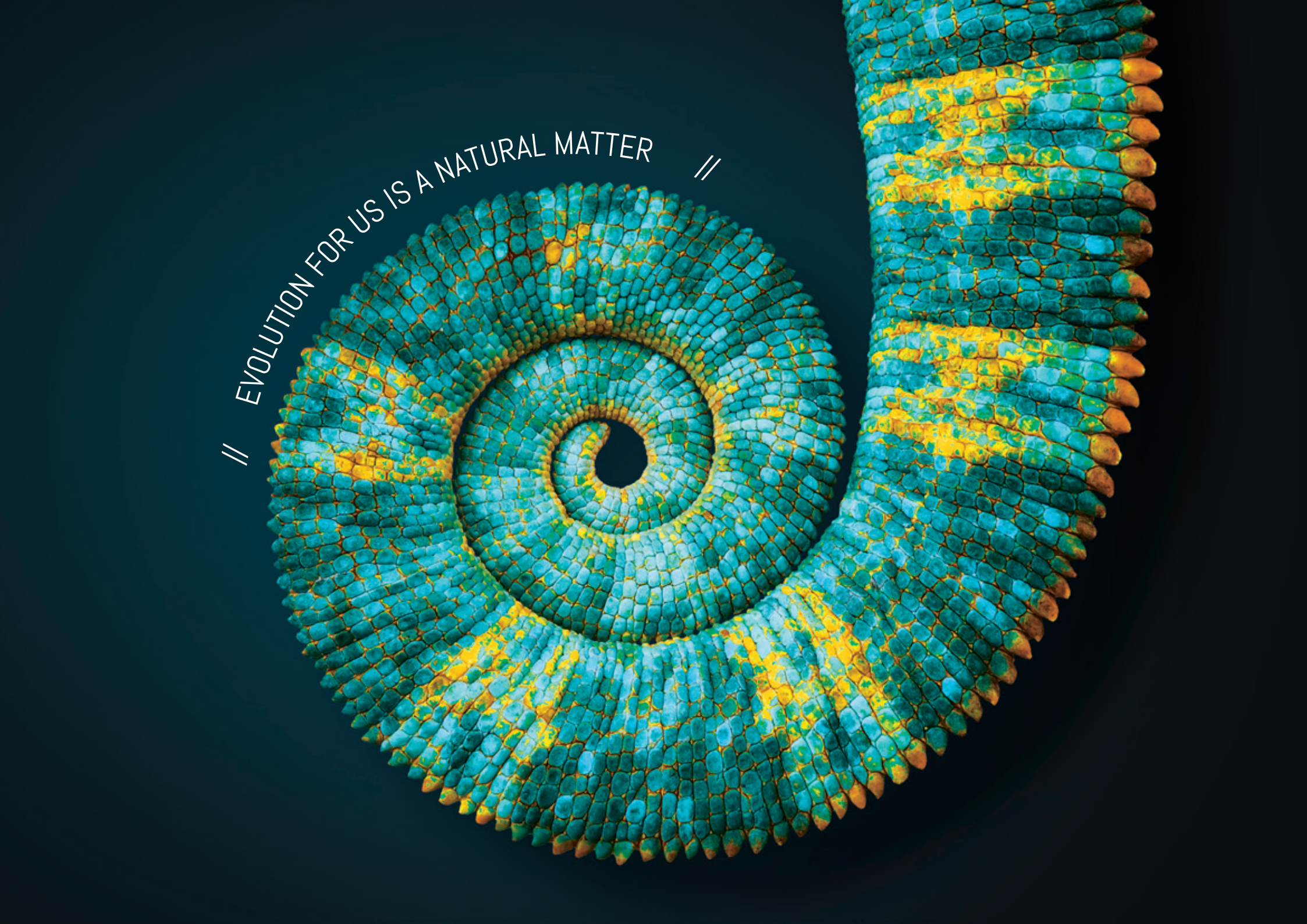
// EVOLUTION FOR US IS A NATURAL MATTER //

UTS evo

Heating jacket arrangement

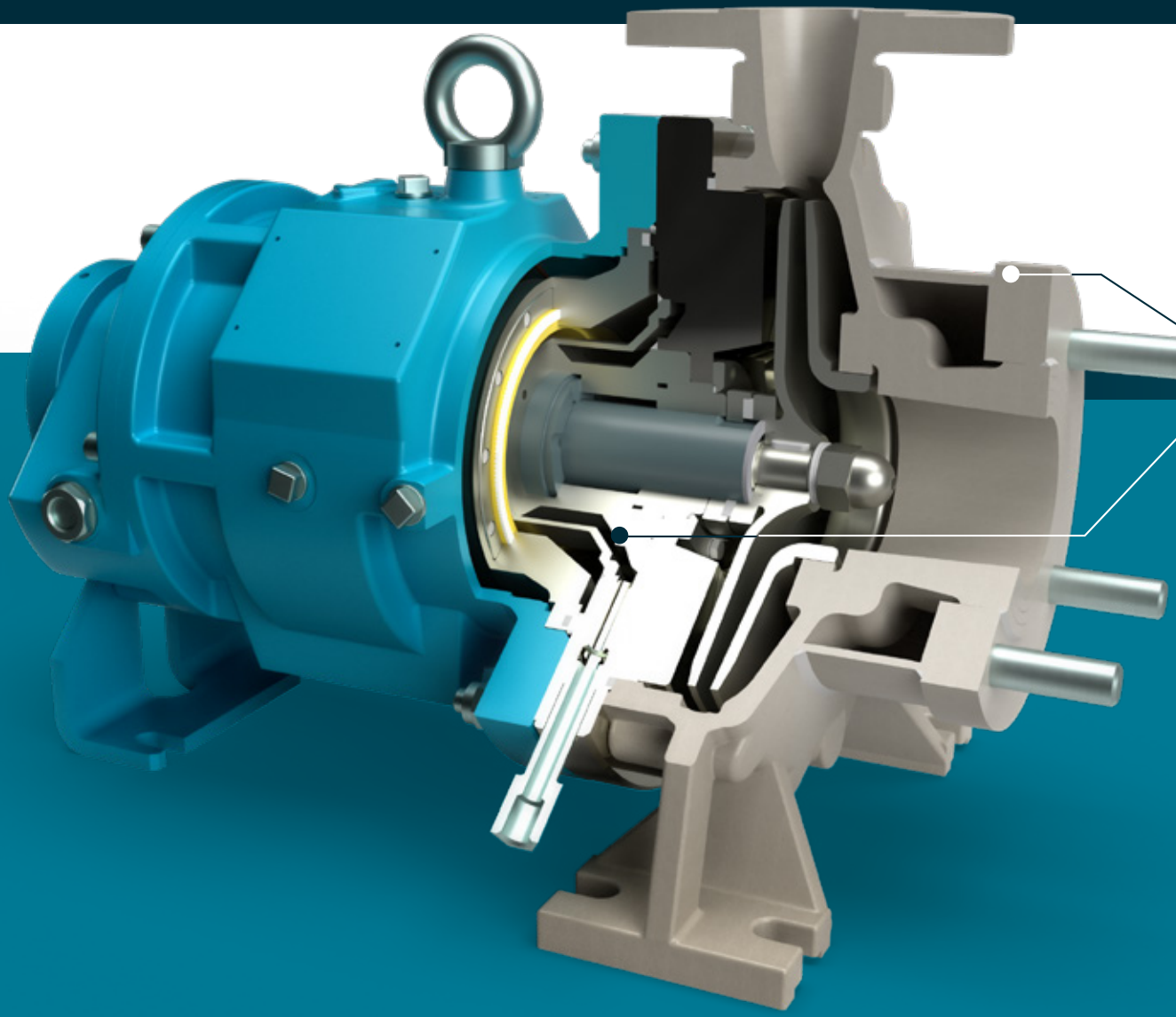

JACKETED VOLUTE CASING

JACKETED BUSHES SUPPORT

In all cases where the medium tends to solidify, if pumped below its solidification point, pumps with heating jackets on casing and bushes support are available upon request, in order to have an homogeneous temperature all throughout the pump. In case of particularly critical fluids (see phthalic anhydride) it is also possible to heat the isolation shell as well.

High temperature Execution

Internal and external magnets are made of:
- NdFeBo for temperatures up to 180 ° C
- SmCo for temperatures up to 300 ° C

For continuous operation at Temp> 200 ° C, it is provided a bearing support arranged with no-contact oil seal rings (labyrinth seal type).

CHROMATIC TEMPERATURE MAP (FLUID at 300 ° C)

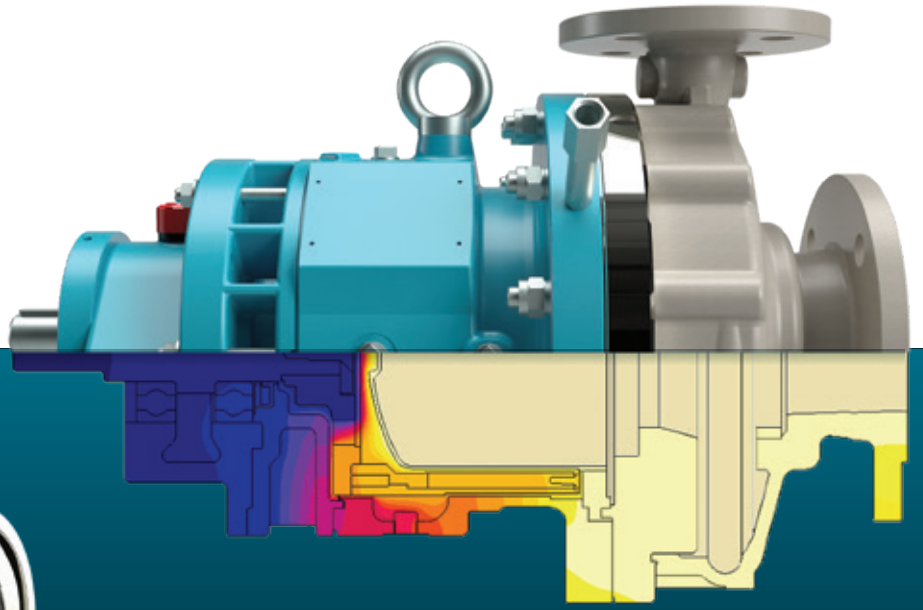

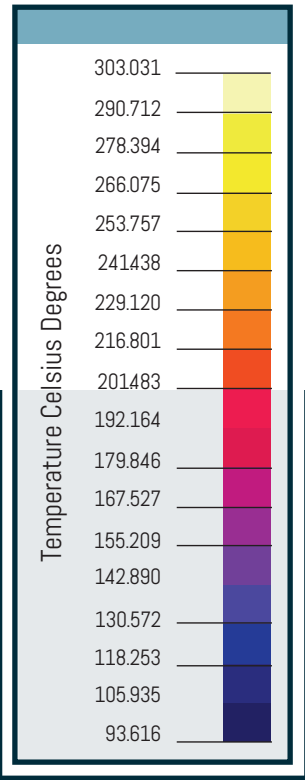

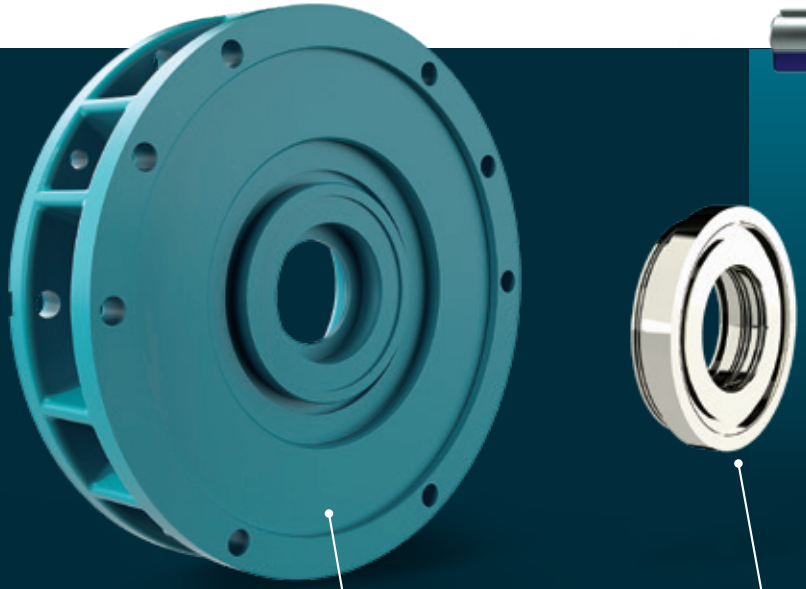

HEAT DISSIPATION FLANGE

BEARING PROTECTION WITH NO-CONTACT LABYRINTH SEAL

UTS
evo

Low temperature Execution

The permanent magnets inside the inner and outer core are in SmCo(Samarium Cobalt). The pump is then arranged with materials such as carbon steel or Aisi 304, selected according to the lowest temperature (min -100 ° C)

OPTION: LANTERN ARRANGED TO BE FLUSHED WITH NITROGEN

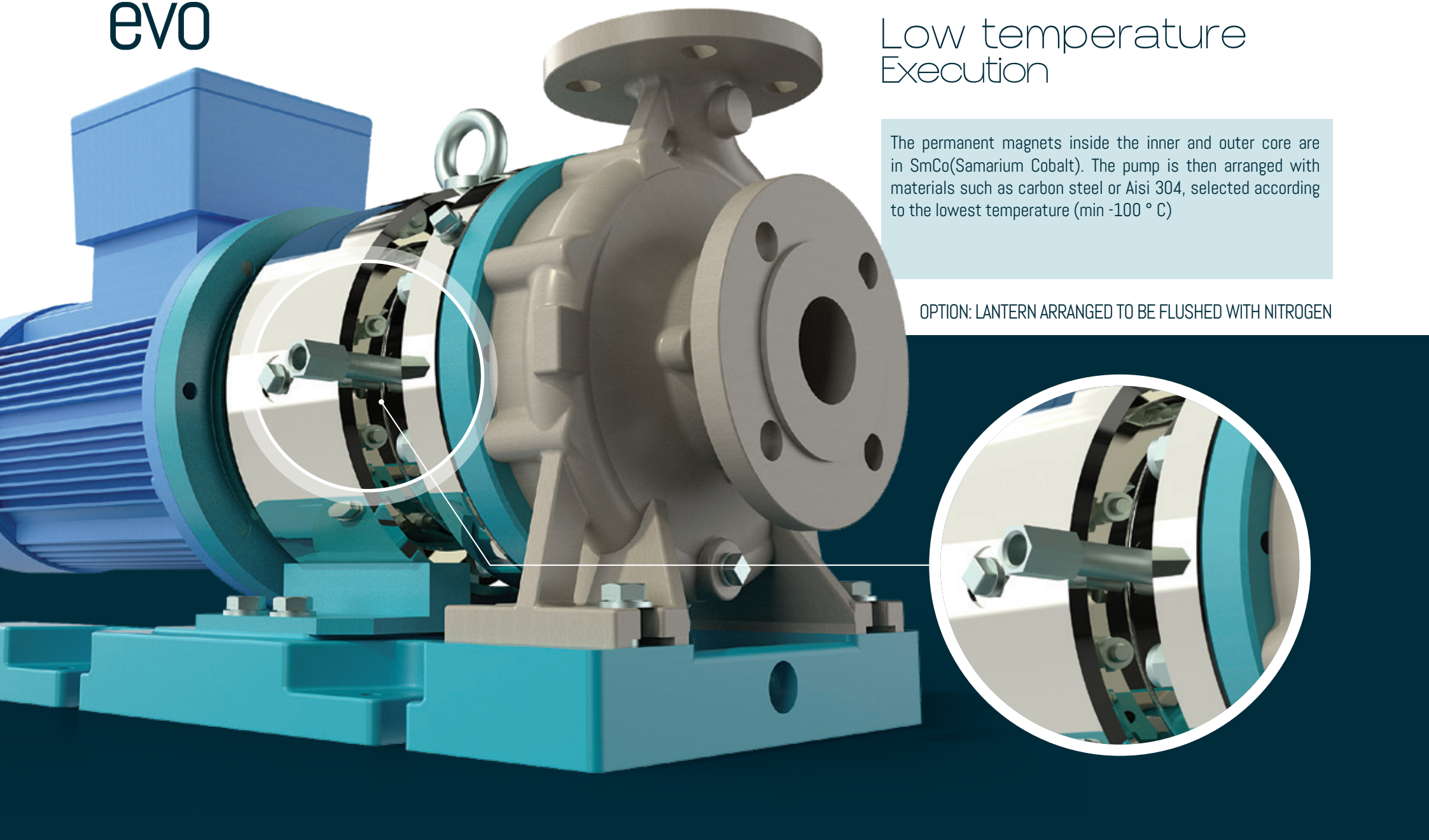

Enhanced safety:

Double Containment and Leakages Detection

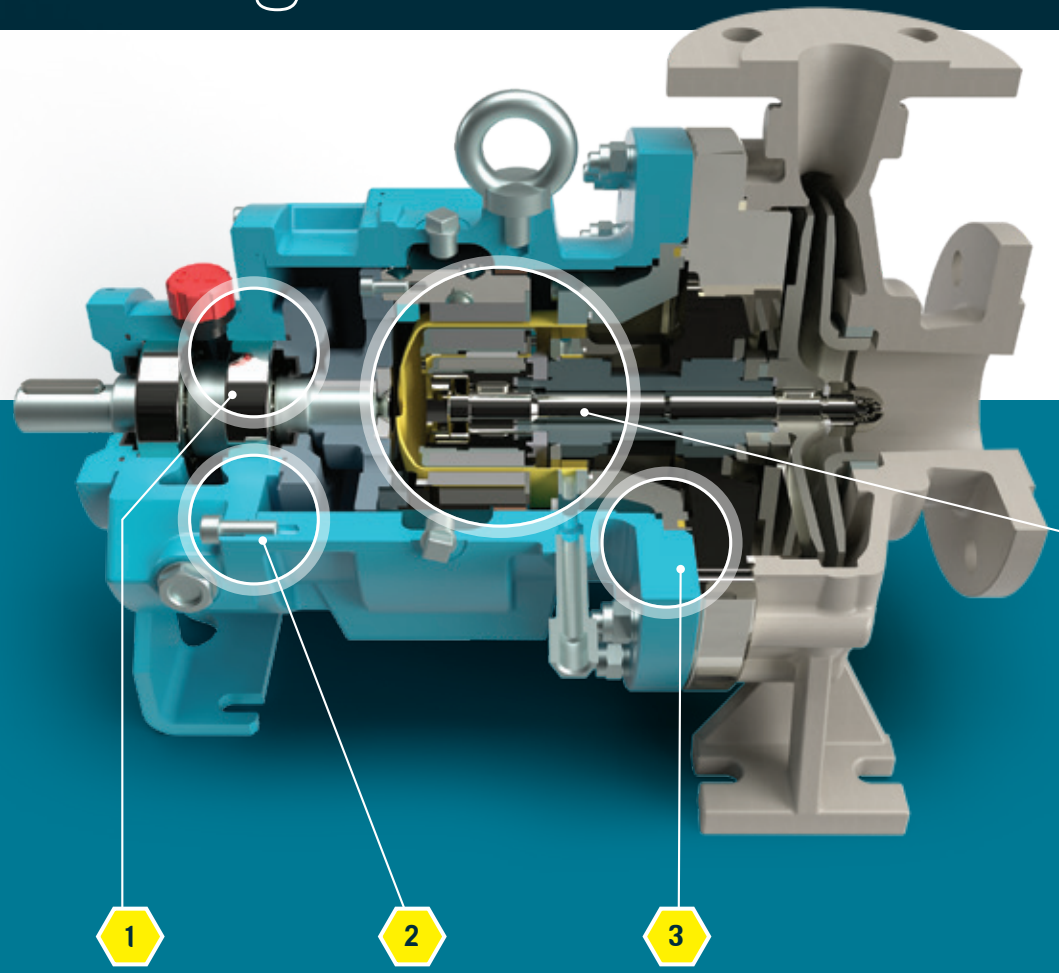

Double containment + Level switch

In all the cases where the safety level against external contamination must be assured, the lantern can be used as a secondary containment. Any possible leakage of the pumped liquid caused by the isolation shell failure, is thus fully contained within the lantern, by mounting a sealing ring instead of the classic corteco / oil seal (1). The containment is also guaranteed by specific o-ring seals located in all critical areas (2) (3). Providing then a level switch on the bottom of the lantern, it is possible to stop the pump as soon as any internal leakage is detected.

Double Isolation Shell + Pressure switch

In all the cases where the safety level against external contamination must be assured, a secondary isolation shell may be installed. Any possible leakage of the pumped liquid caused by the failure of the primary isolation shell in Hastelloy, is thus fully contained within the isolation shell in ZrO2 which works as a secondary containment. The presence of the liquid between the two isolation shells can be detected through a pressure switch which promptly intervenes stopping the pump.

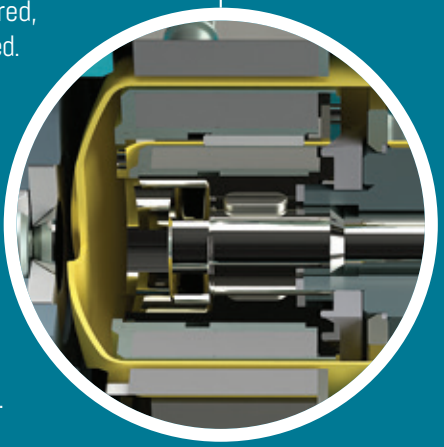

UTS evo

UTS evo

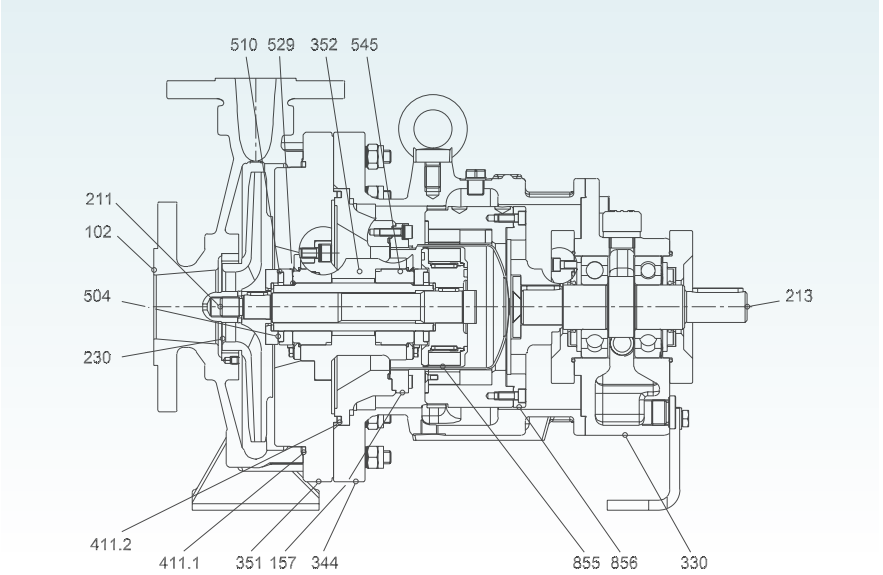

UTS - B evo

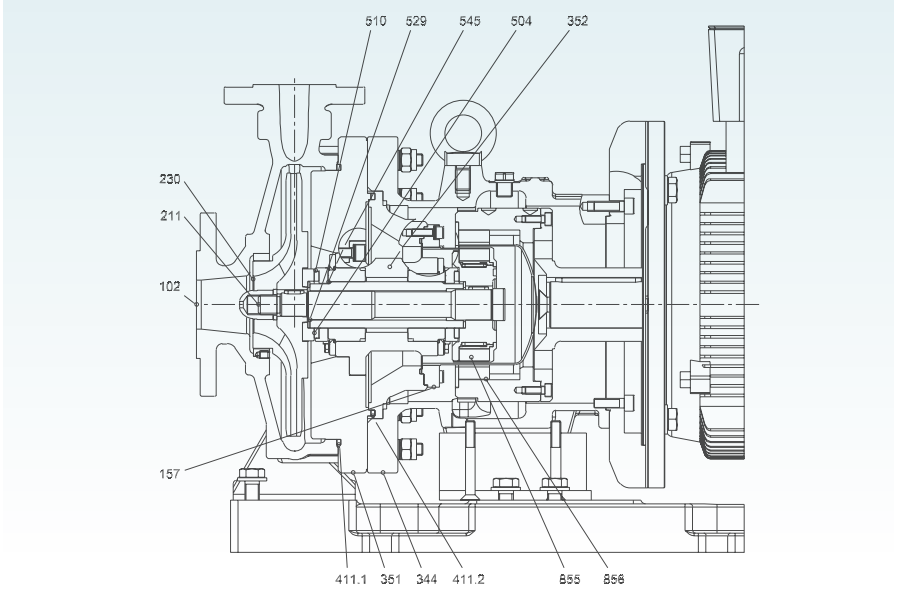

TECHNICAL SPECIFICATIONS

Performances at 2900 rpm	Q max = 320 m3/h -> H max = 95 mcl
Electric Motors	• UTS-B : 1,1 kW (motor size 80) -> 45 kW (motor size225) • UTS : 1,1 kW (motor size 80) -> 90 kW (motor size 280)
Allowable temperature range	• UTS-B : -40 °C* -> +250 °C • UTS : -40 °C* -> +300 °C * -100 °C special execution
Allowable pressure range	• UTS series 160 : 16 bar (20 °C) • UTS series 200 /250 : 16 bar (20 °C)
Flange connections	• UNI 1092-1 / ISO 7005-1 PN 16, type B • On request ANSI 150 RF
Viscosity	0,5 cP min - 180 cP max
Allowable solids	• Max concentration: 2 % in weight • Max particle size : 0,3 mm

PART LIST

DIN	COMPONENT	MATERIAL
102	Casing	AISI 316 (14408-CF8M)
157	Isolation Shell	Hastelloy C + AISI 316L
211	Pump Shaft	AISI 316 (14401)
213	Shaft	Steel C45
230	Impeller	AISI 316 (14408-CF8M)
330	Bearing bracket support	GS400
344	Lantern	GS400 (C40*- AISI316*)* Special Execution
351	Bushes support (flange)	AISI 316L (14409-CF3M) \ AISI 316 (14401)
352	Bushes support (seat)	AISI 316L (14409-CF3M) \ AISI 316 (14401)
411.x	O-Ring	PTFE \ Grafoil
504.x	Spacer ring	PTFE \ Armored Grafoil
510	Thrust bearing	SiC \ RSSiC
529	Bearing sleeve	SiC \ RSSiC
545	Static bushes	SiC \ Grafite \ PEEK \ RSSiC
855	Inner magnet	AISI 316L (14404)
856	Outer magnet	GS400 \ HT (high temperature execution)

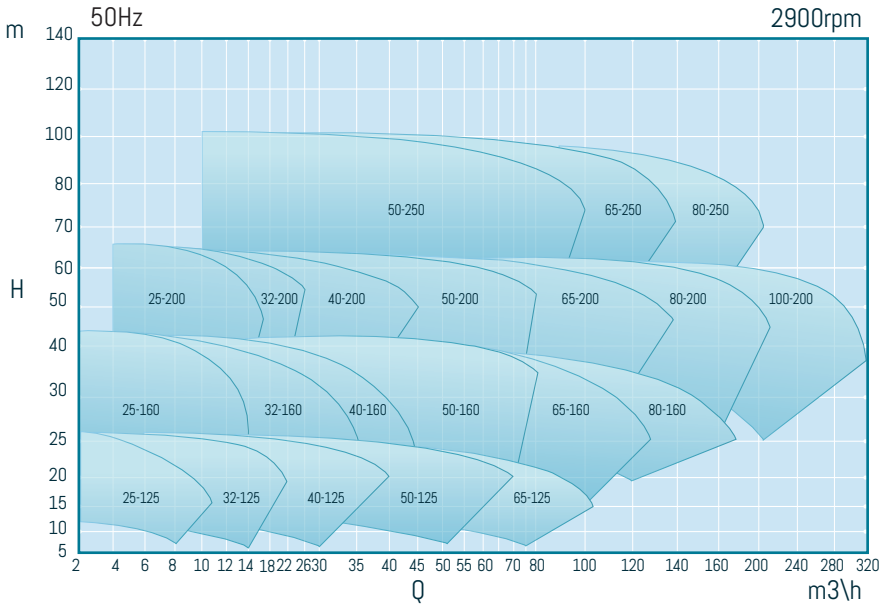

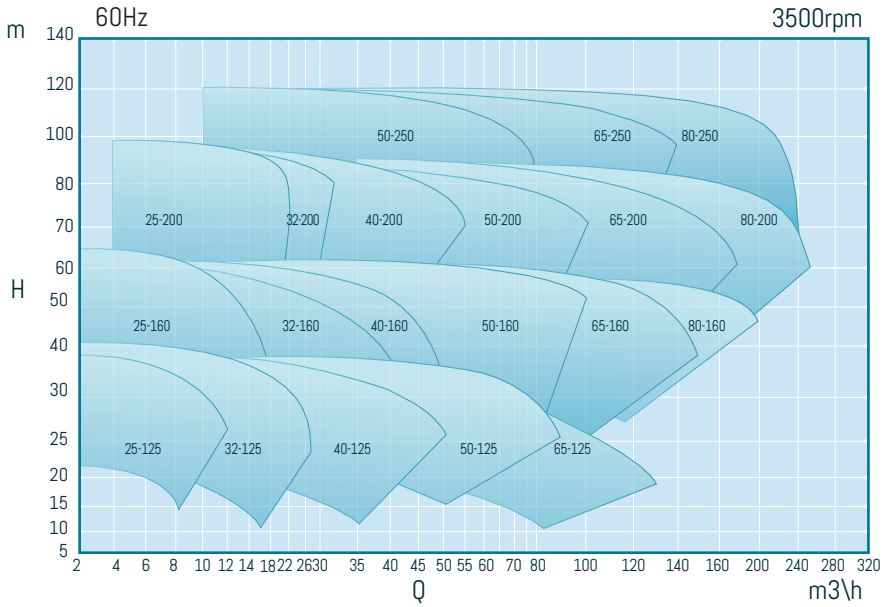

Performance Curves

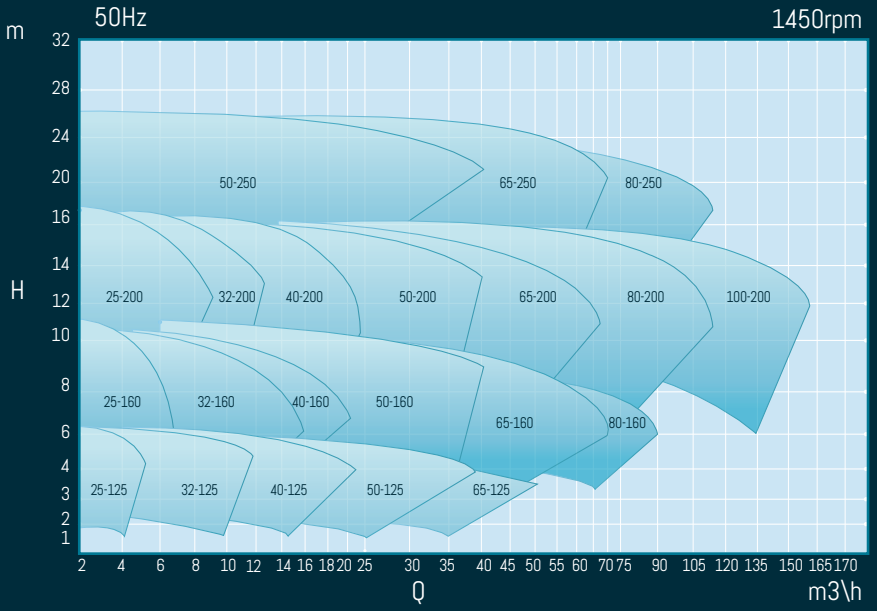

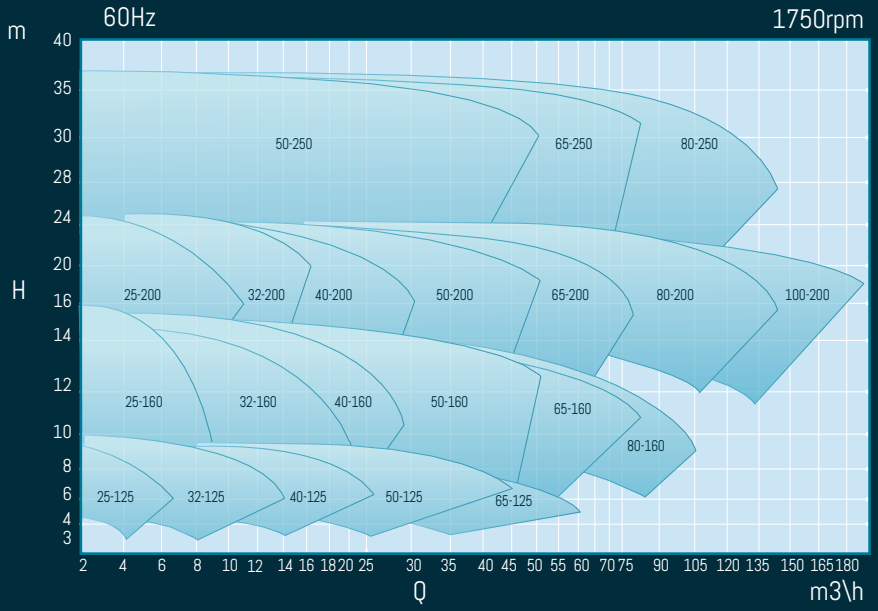

Not binding data refers to water at room temperature. For specific performance curve please contact CDR Pompe S.R.L.

UTS evo bareshaft

Technical data

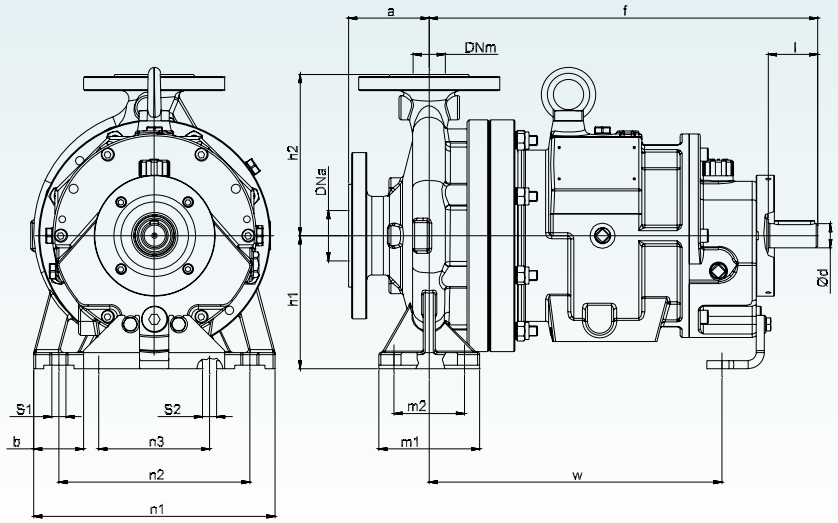

Supp.	Bracket Pump Size	DNa		DNm		a	b		f	h1	h2	l	m1	m2	n1	n2	n3	S1	S2	w
						mm	mm	mm	mm	mm	mm	mm	mm	mm	mm	mm	mm	mm	mm	mm
	UTS EVO 40-25-125	40		25		80	50	24	385	112	140	50	100	70	190	140	110	14	14	285
	UTS EVO 40-25-160	40		25		80	50	24	385	132	160	50	100	70	240	190	110	14	14	285
	UTS EVO 40-25-200	40		25		80	50	24	385	160	180	50	100	70	240	190	110	14	14	285
	UTS EVO 50-32-125	50		32		80	50	24	385	112	140	50	100	70	190	140	110	14	14	285
	UTS EVO 50-32-160	50		32		80	50	24	385	132	160	50	100	70	240	190	110	14	14	285
	UTS EVO 50-32-200	50		32		80	50	24	385	160	180	50	100	70	240	190	110	14	14	285
1	UTS EVO 65-40-125	65		40		80	50	24	385	112	140	50	100	70	210	160	110	14	14	285
	UTS EVO 65-40-160	65		40		80	50	24	385	132	160	50	100	70	240	190	110	14	14	285
	UTS EVO 65-40-200	65	UNI EN	40	UNI EN	100	50	24	385	160	180	50	100	70	265	212	110	14	14	285
	UTS EVO 80-50-125	80	1092-1	50	1092-1	100	50	24	385	132	160	50	100	70	240	190	110	14	14	285
	UTS EVO 80-50-160	80	PN 16RF	50	PN 16RF	100	50	24	385	160	180	50	100	70	265	212	110	14	14	285
	UTS EVO 80-50-200	80	slotted	50	slotted	100	50	24	385	160	200	50	100	70	265	212	110	14	14	285
	UTS EVO 100-65-125	100	ANSI 150	65	ANSI 150	100	65	24	385	160	180	50	125	95	280	212	110	14	14	285
	UTS EVO 65-40-250	65		40		100	65	32	500	180	225	80	125	95	320	250	110	14	14	370
	UTS EVO 80-50-250	80		50		125	65	32	500	180	225	80	125	95	320	250	110	14	14	370
	UTS EVO 100-65-160	100		65		100	65	32	500	160	200	80	125	95	280	212	110	14	14	370
	UTS EVO 100-65-200	100		65		100	65	32	500	180	225	80	125	95	320	250	110	14	14	370
2	UTS EVO 100-65-250	100		65		125	80	32	500	200	250	80	160	120	360	280	110	18	14	370
	UTS EVO 125-80-160	125		80		125	65	32	500	180	225	80	125	95	320	250	110	14	14	370
	UTS EVO 125-80-200	125		80		125	65	32	500	180	250	80	125	95	345	280	110	14	14	370
	UTS EVO 125-80-250	125		80		125	80	32	500	225	280	80	160	120	400	315	110	18	14	370
	UTS EVO 125-100-200	125		100		125	80	32	500	200	280	80	160	120	360	280	110	18	14	370

UTS evo close-coupled motor frame B5

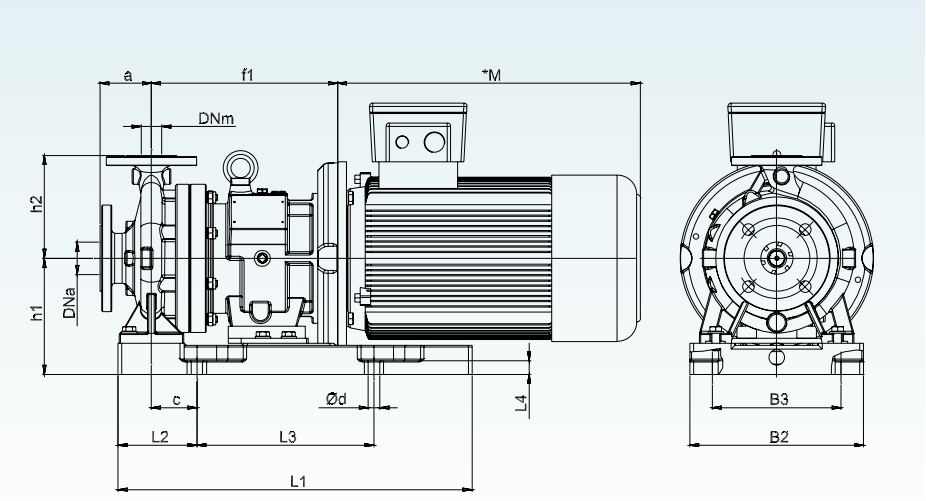

Supp.	Bracket Pump Size	DNa		DNm		a	B2	B3	c	h2	L1	L2	L3	L4	Ød	h1 mot. 80÷90	mot. 100÷112	mot. 132	mot. 160	f1 mot. 80÷90	mot. 100÷112	mot. 132	mot. 160
						mm	mm	mm	mm	mm	mm	mm	mm	mm	mm	mm	mm	mm	mm	mm	mm	mm	mm
	UTS-B EVO 40-25-125	40		25		80	270	200	70,5	140	550	122,5	275	21	18	180	180	180		266	276	287	322
	UTS-B EVO 40-25-160	40		25		80	270	200	70,5	160	550	122,5	275	21	18	180	180	180	208	268	278	289	324
	UTS-B EVO 40-25-200	40		25		80	270	200	70,5	180	550	122,5	275	21	18	180	180	180	208	268	278	289	324
	UTS-B EVO 50-32-125	50	UNI EN	32	UNI EN	80	270	200	70,5	140	550	122,5	275	21	18	180	180	180		268	278	289	324
	UTS-B EVO 50-32-160	50	1092-1	32	1092-1	80	270	200	70,5	160	550	122,5	275	21	18	180	180	180	208	268	278	289	324
	UTS-B EVO 50-32-200	50	PN 16RF	32	PN 16RF	80	270	200	70,5	180	550	122,5	275	21	18	180	180	180	208	269	279	290	325
	UTS-B EVO 65-40-125	65	asolati	40	asolati	80	270	200	70,5	140	550	122,5	275	21	18	180	180	180		268	278	289	324
1	UTS-B EVO 65-40-160	65	ANSI	40	ANSI	80	270	200	70,5	160	550	122,5	275	21	18	180	180	180	208	268	278	289	324
	UTS-B EVO 65-40-200	65	150	40	150	100	270	200	70,5	180	550	122,5	275	21	18	180	180	180	208	269	279	290	325
	UTS-B EVO 80-50-125	80		50		100	270	200	70,5	160	550	122,5	275	21	18	180	180	180	208	271	281	292	327
	UTS-B EVO 80-50-160	80		50		100	270	200	70,5	180	550	122,5	275	21	18	180	180	180	208	271	281	292	327
	UTS-B EVO 80-50-200	80		50		100	270	200	70,5	200	550	122,5	275	21	18	180	180	180	208	272	282	293	328
	UTS-B EVO 100-65-125	100		65		100	270	200	70,5	180	550	122,5	275	21	18	180	180	180	208	276	286	297	332
2	UTS-B EVO 100-65-160	100		65		100	270	200	82,5	200	550	122,5	275	21	18		208				335		

*M dimension is up to motor manufacturer

UTS evo close-coupled motor frame B35

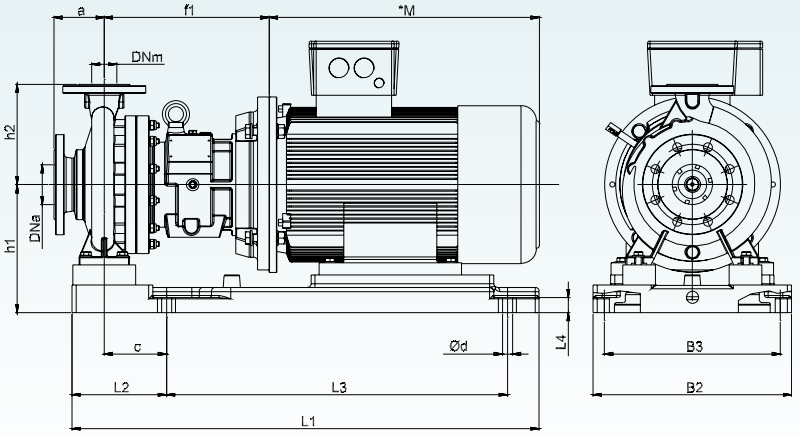

Supp.	Bracket Pump Size	DNa		DNm		a	B2	B3	c	h2	L1	L2	L3	L4	Ød	h1 mot. 132	mot. 160	mot. 180	f1 mot. 132	mot. 160	mot. 180
						mm	mm	mm	mm	mm	mm	mm	mm	mm	mm	mm	mm	mm	mm	mm	mm
	UTS-B EVO 80-50-160	80		50		100	395	350	124	180	930	188	679	30	20			255			327
1	UTS-B EVO 80-50-200	80		50		100	395	350	124	200	930	188	679	30	20			255			328
	UTS-B EVO 100-65-125	100		65		100	395	350	125	180	930	188	679	30	20			255			332
	UTS-B EVO 65-40-250	65	UNI EN	40	UNI EN	100	395	350	125	225	930	188	679	30	20	235	235	255	348	383	383
	UTS-B EVO 80-50-250	80	1092-1	50	1092-1	125	395	350	125	225	930	188	679	30	20	235	235	255	346	381	381
	UTS-B EVO 100-65-160	100	PN 16RF	65	PN 16RF	100	395	350	125	200	930	188	679	30	20	215	235	255	346	381	381
	UTS-B EVO 100-65-200	100	slotted	65	slotted	100	395	350	125	225	930	188	679	30	20	235	235	255	348	383	383
	UTS-B EVO 100-65-250	100	ANSI 150	65	ANSI 150	125	395	350	110	250	930	188	679	30	20	255	255	255	346	381	381
2	UTS-B EVO 125-80-160	125		80		125	395	350	125	225	930	188	679	30	20	235	235	255	347	382	382
	UTS-B EVO 125-80-200	125		80		125	395	350	125	250	930	188	679	30	20	235	235	255	348	383	383
	UTS-B EVO 125-80-250	125		80		125	395	350	110	280	930	188	679	30	20	280	280	280	346	381	381
	UTS-B EVO 125-100-200	125		100		125	395	350	110	280	930	188	679	30	20	255	255	255	348	383	383

Supp.	Bracket Pump Size	DNa		DNm		a	B2	B3	c	h2	L1	L2	L3	L4	Ød	h1 mot. 200	mot. 225	f1 mot. 200	mot 225
						mm	mm	mm	mm	mm	mm	mm	mm	mm	mm	mm	mm	mm	mm
	UTS-B EVO 80-50-200	80	50		100	406	360	124	200	1036	188	785	30	20	275	325			
1	UTS-B EVO 65-40-250	65		40		100	406	360	125	225	1036	188	785	30	20	255	280	325	380
	UTS-B EVO 80-50-250	80		50		125	406	360	125	225	1036	188	785	30	20	255	280	325	378
	UTS-B EVO 100-65-160	100		65		100	406	360	125	200	1036	188	785	30	20	255	325		
	UTS-B EVO 100-65-200	100		65		100	406	360	125	225	1036	188	785	30	20	255	280	325	380
	UTS-B EVO 100-65-250	100		65		125	406	360	110	250	1036	188	785	30	20	275	280	325	378
	UTS-B EVO 125-80-160	125		80		125	406	360	125	225	1036	188	785	30	20	255	280	325	379
	UTS-B EVO 125-80-200	125		80		125	406	360	125	250	1036	188	785	30	20	255	280	325	380
2	UTS-B EVO 125-80-250	125		80		125	406	360	110	280	1036	188	785	30	20	300	300	325	378
	UTS-B EVO 125-100-200	125		100		125	406	360	110	280	1036	188	785	30	20	275	280	325	380

Not binding data.

*IM dimension is up to motor manufacturer.

UTS evo on baseplate motor frame B3

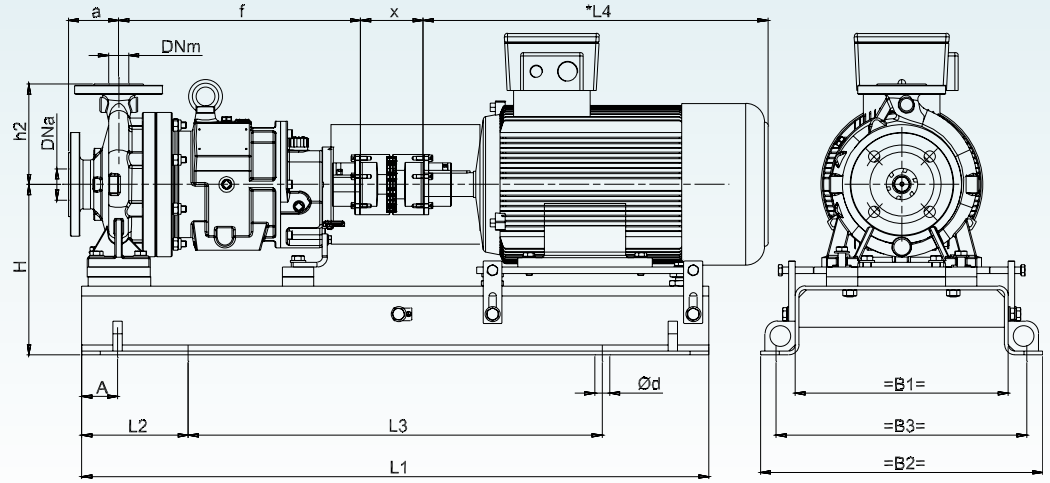

Supp	Bracket Pump Size	DNa		DNm		a	A	f	h2	x	H mot. 80	mot. 90	mot 100	mot 112	mot. 132	mot 160	mot. 180	mot. 200	mot. 225	mot. 250	mot. 280
						mm	mm	mm	mm	mm	mm	mm	mm	mm	mm	mm	mm	mm	mm	mm	mm
1	UTS EVO 40-25-125	40		25		80	60	385	140	100	257	257	257	257	272	272					
	UTS EVO 40-25-160	40		25		80	60	385	160	100	257	257	257	257	272	272					
	UTS EVO 40-25-200	40		25		80	60	385	180	100	285	285	285	285	300	300					
	UTS EVO 50-32-125	50	UNI EN	32	UNI EN	80	60	385	140	100	257	257	257	257	272	272					
	UTS EVO 50-32-160	50	1092-1	32	1092-1	80	60	385	160	100	257	257	257	257	272	272					
	UTS EVO 50-32-200	50	PN 16RF	32	PN 16RF	80	60	385	180	100	285	285	285	285	300	300					
	UTS EVO 65-40-125	65	slottedi	40	slotted	80	60	385	140	100	257	257	257	257	272	272					
	UTS EVO 65-40-160	65	ANSI	40	ANSI	80	60	385	160	100	257	257	257	257	272	272					
	UTS EVO 65-40-200	65	150	40	150	100	60	385	180	100	285	285	285	285	300	300					
	UTS EVO 80-50-125	80		50		100	60	385	160	100	257	257	257	257	272	272					
	UTS EVO 80-50-160	80		50		100	60	385	180	100	285	285	285	285	300	300	298				
	UTS EVO 80-50-200	80		50		100	60	385	200	100	285	285	285	285	300	300	298				
	UTS EVO 100-65-125	100		65		100	60	385	180	100	285	285	285	285	300	300					
2	UTS EVO 65-40-250	65		40		100	75	500	225	140	305	305	305	305	298	318	318	358	383		
	UTS EVO 80-50-250	80		50		125	75	500	225	140	305	305	305	305	298	318	318	358	383	403	
	UTS EVO 100-65-160	100		65		100	75	500	200	140	285	300	300	300	278	298	318	338			
	UTS EVO 100-65-200	100		65		100	75	500	225	140	305	305	298	298	298	318	318	358	383		
	UTS EVO 100-65-250	100		65		125	90	500	250	140	318	318	318	318	318	338	338	358	383	403	433
	UTS EVO 125-80-160	125		80		125	75	500	225	140	305	305	298	298	298	318	318	358			
	UTS EVO 125-80-200	125		80		125	75	500	250	140	298	298	298	298	298	318	318	358	383	403	
	UTS EVO 125-80-250	125		80		125	90	500	280	140	363	363	363	363	363	363	363	383	383	403	433
	UTS EVO 125-100-200	125		100		125	90	500	280	140	318	318	318	318	318	338	338	358	383	403	433

Bracket Pump Size	Baseplate n° (motor size)																	
	80	90	90	100	112	132	132	160	160	180	180	200	225	225	250	280	280	
	M	S	L	L	M	S	M	M	L	M	L	L	S	M	M	S	M	
UTS EVO 40-25-125	2	2	3	3	3	4	4	5	5									
UTS EVO 40-25-160	2	2	3	3	3	4	4	5	5									
UTS EVO 40-25-200	2	2	3	3	3	4	4	5	5									
UTS EVO 50-32-125	2	2	3	3	3	4	4	5	5									
UTS EVO 50-32-160	2	2	3	3	3	4	4	5	5									
UTS EVO 50-32-200	2	2	3	3	3	4	4	5	5									
UTS EVO 65-40-125	2	2	3	3	3	4	4	5	5									
UTS EVO 65-40-160	2	2	3	3	3	4	4	5	5									
UTS EVO 65-40-200	3	3	3	3	3	4	4	5	5									
UTS EVO 65-40-250	4	4	4	4	4	5	5	6	6	6	6	7	7					
UTS EVO 80-50-125	2	2	3	3	3	4	4	5	5									
UTS EVO 80-50-160	3	3	3	3	3	4	4	5	5	5								
UTS EVO 80-50-200	3	3	3	3	3	4	4	5	5	5								
UTS EVO 80-50-250	4	4	4	4	4	5	5	6	6	6	6	7	7	7	8			
UTS EVO 100-65-125	3	3	3	3	3	4	4	5	5									
UTS EVO 100-65-160	3	4	4	4	4	5	5	6	6	6	6	7						
UTS EVO 100-65-200	4	4	4	5	5	5	5	6	6	6	7	7	7	7				
UTS EVO 100-65-250	5	5	5	5	5	5	5	6	6	6	7	7	7	7	8	9		
UTS EVO 125-80-160	4	4	4	5	5	5	5	6	6	6	7	7						
UTS EVO 125-80-200	5	5	5	5	5	5	5	6	6	6	7	7	7	7	8			
UTS EVO 125-80-250	6	6	6	6	6	6	6	6	6	6	7	7	7	7	8	9	9	
UTS EVO 125-100-200	5	5	5	5	5	5	5	6	6	6	7	7	7	7	8	9		

Baseplate n°	L1	L2	L3	B1	B2	B3	Ød
	mm	mm	mm	mm	mm	mm	mm
2	800	130	540	270	360	320	M16
3	900	150	600	300	390	350	M16
4	1000	170	660	340	450	400	M20
5	1200	190	740	380	490	440	M20
6	1250	205	840	430	540	490	M20
7	1400	230	940	480	610	550	M24
8	1600	270	1060	530	660	600	M24
9	1800	300	1200	600	730	670	M24

*L4 dimension is according to installed motor manufacturer
Dimensions not indicated is according to UNI EN ISO 3661

Not binding data.

UTS
evo
// EVOLUTION FOR US IS A NATURAL MATTER //
CDR®
Pompe s.r.l.
// WWW.CDRPOMPE.COM //

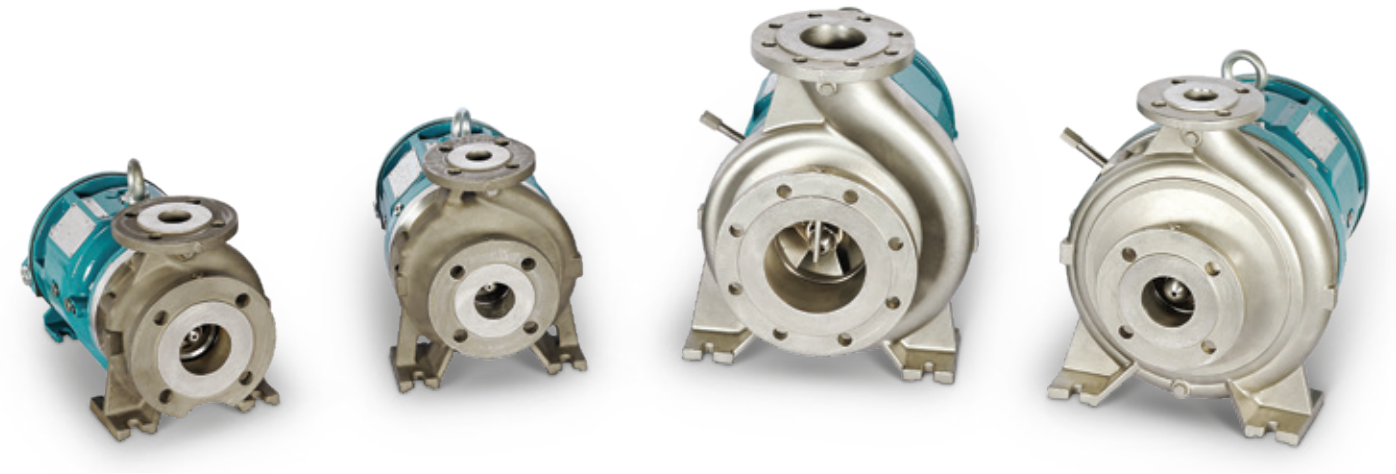

CDR Pompe s.r.l.

CDR Pompe S.r.l.

Via Raffaello Sanzio, 57 - 20021 Bollate (MI) ITALY
Tel. +39 029901941 - Fax +39 029980606

// rdo@cdrpompe.com //

// WWW.CDRPOMPE.COM //